UDC 629.113 – 592.5

Ref. No. : ISO/R 1226-1970 (E)

ISO

INTERNATIONAL ORGANIZATION FOR STANDARDIZATION

ISO RECOMMENDATION

R 1226

SYMBOLIC DESIGNATION OF DIRECTION OF CLOSING AND FACES OF DOORS, WINDOWS AND SHUTTERS

PART I

iTeh STANDARD PREVIEW
(standards.iteh.ai)
ISO/R 1226:1970
https://standards.iteh.ai/catalog/standards/sist/6017cf75-4c05-44f3-9620-e41496b7c6fe/iso-r-1226-1970

1st EDITION
June 1970

COPYRIGHT RESERVED

The copyright of ISO Recommendations and ISO Standards belongs to ISO Member Bodies. Reproduction of these documents, in any country, may be authorized therefore only by the national standards organization of that country, being a member of ISO.

For each individual country the only valid standard is the national standard of that country.

Printed in Switzerland

Also issued in French and Russian. Copies to be obtained through the national standards organizations.

Preisgr. E

iTeh STANDARD PREVIEW
(standards.iteh.ai)
ISO/R 1226:1970
https://standards.iteh.ai/catalog/standards/sist/6017cf75-4c05-44f3-9620-e41496b7c6fe/iso-r-1226-1970

BRIEF HISTORY

The ISO Recommendation R 1226, *Symbolic designation of direction of closing and faces of doors, windows and shutters – Part I*, was drawn up by Technical Committee ISO/TC 59, *Building construction*, the Secretariat of which is held by the Association Française de Normalisation (AFNOR).

Work on this question led to the adoption of a first Draft ISO Recommendation No. 951,which was circulated in 1966 to all the ISO Member Bodies for enquiry. As the results of this consultation were not considered satisfactory, the Technical Committee presented a second Draft ISO Recommendation No. 951,which was circulated to all the ISO Member Bodies for enquiry in April 1969. It was approved, subject to a few modifications of an editorial nature, by the following Member Bodies :

Australia	Israel	South Africa, Rep. of
Austria	Italy	Spain
Belgium	Korea, Rep. of	Sweden
Brazil	Netherlands	Switzerland
France	New Zealand	Turkey
Germany	Norway	U.A.R.
Greece	Peru	United Kingdom
India	Poland	U.S.A.
Iran	Romania	

iTeh STANDARD PREVIEW
(standards.iteh.ai)
ISO/R 1226:1970
https://standards.iteh.ai/catalog/standards/sist/...f75-4c05-44f3-9620-e41496b7c6fe/iso-r-1226-1970

The following Member Bodies opposed the approval of the second Draft :

Hungary
Portugal

This second Draft ISO Recommendation was then submitted by correspondence to the ISO Council, which decided to accept it as an ISO RECOMMENDATION.

iTeh STANDARD PREVIEW
(standards.iteh.ai)
ISO/R 1226:1970
https://standards.iteh.ai/catalog/standards/sist/6017cf75-4c05-44f3-9620-e41496b7c6fe/iso-r-1226-1970

ISO Recommendation | R 1226 | June 1970

SYMBOLIC DESIGNATION OF DIRECTION OF CLOSING AND FACES OF DOORS, WINDOWS AND SHUTTERS

PART I

INTRODUCTION

Hardware rotating components, such as hinges, hinge-pins, pivots, etc., or components for locking and closing, such as cremones, bolts, locks, etc., used on doors, windows or shutters, are not always identical, their form depending on whether they are used on leaves closing in one direction or the other, and, frequently, on their position on the various faces. The structure of these components itself differs often with the kind of hardware. Furthermore, for doors, windows and shutters, the position of their frames when considered with respect to the room to be isolated differs depending on the operating system* of the leaves.

The purpose of this ISO Recommendation is to facilitate the international trade of these components by specifying a standard convention to identify the direction of rotation and the faces of the leaves of a door, window or shutter and to provide designations and symbols accordingly which are unambiguous, avoiding the use of such terms as "left hand" and "right hand" which cause mistakes owing to divergent national uses. These designations do not necessitate the use of drawings.

This ISO Recommendation deals with the conventions and general principles for the determination of symbols. ISO Recommendation R . . .**, *Symbolic designation of direction of closing and faces of doors, windows and shutters – Part II*, gives the particular cases and the simplified symbols for components with more than one leaf.

1. SCOPE

This ISO Recommendation fixes conventions

(*a*) to symbolize the direction on plan of closing of door, window and shutter leaves;

(*b*) to identify by a symbol each of the faces of doors, windows or shutters in relation to their direction of operating;

(*c*) to specify the arrangement of the frame of doors, windows or shutters in relation to the premises or the room to be isolated.

* For example in France, a window "à la française" opens towards the inside of the room; a window "à l'anglaise" opens towards the outside.

** At present under study.

2. FIELD OF APPLICATION

This ISO Recommendation applies to doors, windows and shutters, the leaves of which move around one or more vertical axes.

It does not apply to components the leaves of which move around horizontal axes, nor to components the leaves of which move by translation.

3. DEFINITIONS

3.1 Directions of rotation

3.1.1 *Clockwise**. (See Fig. 1.)

3.1.2 *Anticlockwise**. (See Fig. 2.)

3.1.3 *Conventional direction of rotation.* That one of the two directions of rotation causing the leaves to open or to close which is chosen according to this ISO Recommendation for the designation of the latter. (See clause 5.1.)

3.2 Identification of faces

3.2.1 *Opening face.* The face of the leaf located on the side on which the leaf opens. (See Fig. 1.)

3.2.2 *Closing face.* The face of the leaf located on the side on which the leaf closes. (See Fig. 1.)

3.2.3 *Conventional face.* That one of the two faces, opening face or closing face, which is chosen according to this ISO Recommendation to fix the arrangement of doors, windows or shutters. (See clause 5.2.)

iTeh STANDARD PREVIEW
(standards.iteh.ai)

4. SYMBOLS

ISO/R 1226:1970
https://standards.iteh.ai/catalog/standards/sist/6017cf75-4c05-44f3-9620-e41496b7c6fe/iso-r-1226-1970

4.1 **Clockwise:** 5

4.2 **Anticlockwise :** 6

4.3 **Opening face :** 0

4.4 **Closing face :** 1

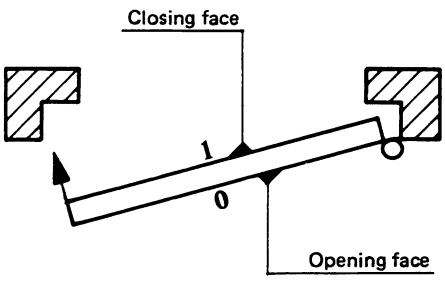

FIG. 1 – **Clockwise closing : 5**

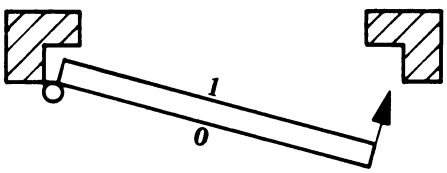

FIG. 2 – **Anticlockwise closing : 6**

* See ISO Recommendation R 1503, *Directions of movements.* (At present Draft ISO Recommendation.)

5. CONVENTIONS

5.1 Direction of rotation

The conventional direction of rotation is the DIRECTION OF CLOSING.

5.2 Face

5.2.1 The conventional face to identify is the one which is located INSIDE the premises or the room "to be isolated" or designated in another way.

5.2.2 When there is an ambiguity, for example for a communicating door between two rooms of the same nature, the room "to be isolated" is the room in which is situated the opening face of the leaf when the door is closed.

6. GENERAL RULES FOR APPLICATION TO DOORS, WINDOWS AND SHUTTERS

6.1 Single leaf component

Unless otherwise stated* the single leaf components should be designated by the whole set of symbols established in accordance with the conventions stated in section 5 above.

Examples of designation : See Annex (Fig. 3).

6.2 Components with more than one leaf

6.2.1 The designation of components with more than one leaf should be individual, each leaf being designated by a whole set of symbols in accordance with the convention stated in section 5 above.

6.2.2 However, for these components, certain additional conventions, specified in ISO Recommendation R . . .**, *Symbolic designation of direction of closing and faces of doors, windows and shutters – Part II*, allow the reduction of the resulting symbolization.

iTeh STANDARD PREVIEW

ISO/R 1226:1970

https://standards.iteh.ai/catalog/standards/sist/6017cf75-4c05-44f3-9620-e41496b7c6fe/iso-r-1226-1970

7. APPLICATION TO HARDWARE

7.1 Rules particular to hardware

ISO Recommendations particular to hardware will supplement the present one at a later stage.

7.2 Orders

So as to avoid confusion it is advisable to order the suitable hardware items by referring to the whole standard designations of the components they are intended for, even in particular cases where a single one of these symbols would seem sufficient.

Example : Hinges for window 6.0.

Mortise lock, with safety blocks and closing knob for door 5.1.

---

* In the particular case where the direction of rotation of the doorleaves or door-set types concerned is sufficient to differentiate them, the number 5 or 6 may be used alone for their designation. The designation 5 is then equivalent to 5.0 and to 5.1 and the designation 6 to 6.0 and to 6.1.

** At present under study.

ANNEX

EXAMPLES OF DESIGNATION

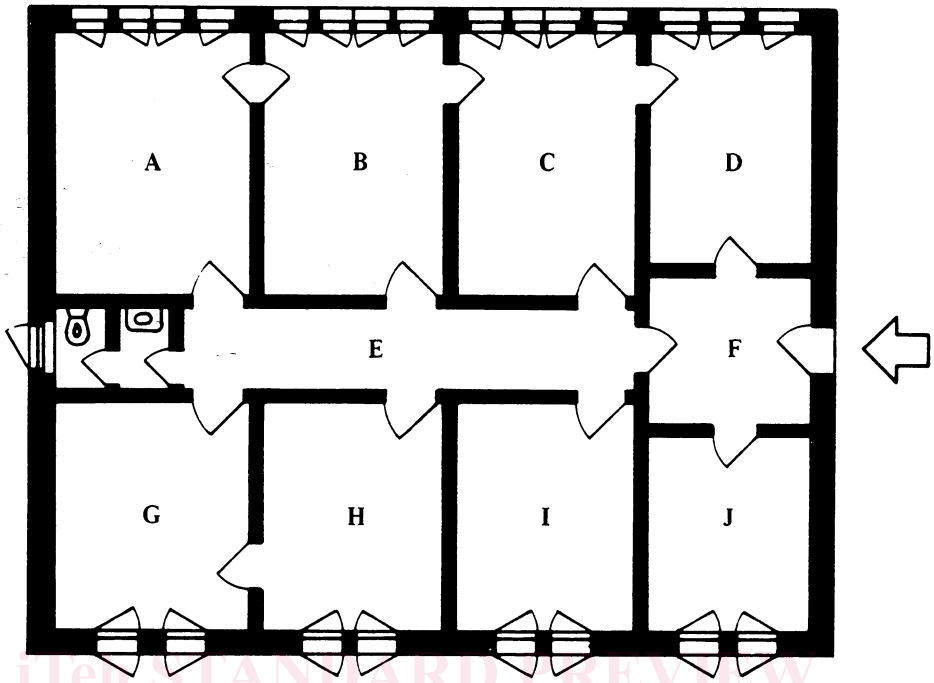

FIG. 3 – General plan

iTeh STANDARD PREVIEW
(standards.iteh.ai)
ISO R 1226:1970
https://standards.iteh.ai/catalog/standards/sist/6017cf75-4c05-44f3-9620-e41496b7c6fe/iso-r-1226-1970

Room A – Doors : entry : 6.0
communicating with room B : 5.0*
Windows : 2 type 6.0 – 2 type 5.0

Room B – Doors : entry : 6.0
communicating with room A : 6.0*
Windows : 2 type 6.0 – 2 type 5.0

Room C – Doors : entry : 6.0
communicating with room B : 6.0
Windows : 2 type 6.0 – 2 type 5.0

Room D – Doors : entry : 6.0
communicating with room C : 6.0
Windows : 2 type 5.0 – 1 type 6.0

Corridor E – Door : entry : 6.1

Hall F – Door : entry 5.0

Room G – Doors : entry 5.0
communicating with room H : 6.0
Windows : 1 type 5.0 with shutter 6.1 – 1 type 6.0 with shutter 5.1

Rooms H, I, J – Doors : 5.0
Windows : 1 type 5.0 with shutter 6.1 – 1 type 6.0 with shutter 5.1

Lavatory – Door : 5.0

W.C. – Door : 5.0
Window : 1 type 5.1

---

* The communicating door between the rooms A and B is a double action door (not a door with two leaves).

APPENDIX X

SINGLE LEAF DOORS

Correspondence between the ISO symbols (in heavy type) and those of the A.R.G.E.*

6.0
(ARGE : 1)

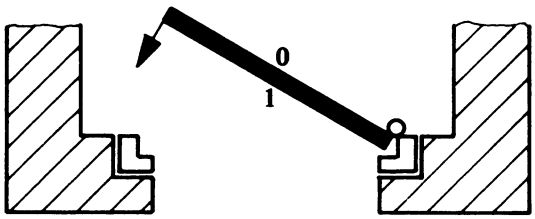

FIG. 4

5.0
(ARGE : 2)

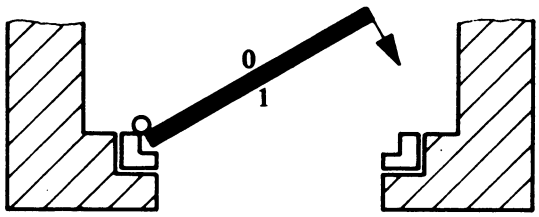

FIG. 5

iTeh STANDARD PREVIEW
(standards.iteh.ai)
ISO/R 1226:1970
https://standards.iteh.ai/catalog/standards/sist/6017cf75-4c05-44f3-9620-1496b7c6fe/iso-r-1226-1970

6.1
(ARGE : 3)

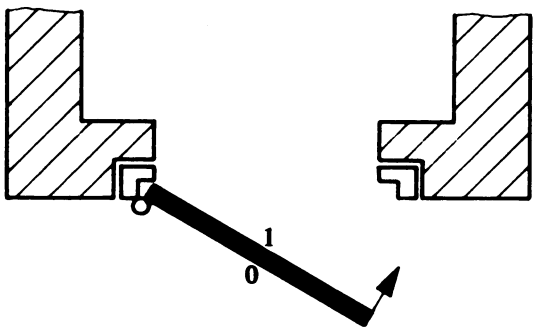

FIG. 6

5.1
(ARGE : 4)

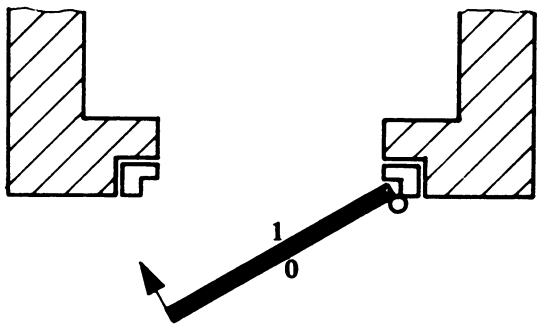

FIG. 7

* European Locks and Fittings Association.

APPENDIX Y

SELECTION OF SYMBOLS

Symbols 5, 6, 0 and 1 representing the vertical rotations clockwise (5) and anticlockwise (6), and the opening face (0) and the closing face (1) respectively, were selected for the following reasons :

Y.1 DIRECTIONS OF ROTATION

Following the example given in ISO Recommendation R 2, *Designation of the direction of twist in textile yarns*, which designates without ambiguity these directions by the letters S and Z because of the symbolism of the corresponding characters, such a system seemed to be possible for the symbolization of the direction of vertical rotation of doors, windows or shutters.

However, taking into account that the Cyrillic alphabet does not include these characters, a designation by numbers was more convenient to information processing by computers.

Y.1.1 Clockwise

The clockwise vertical rotation was symbolized by the figure 5, the shape of which is the nearest to the letter S (see Fig. 8).

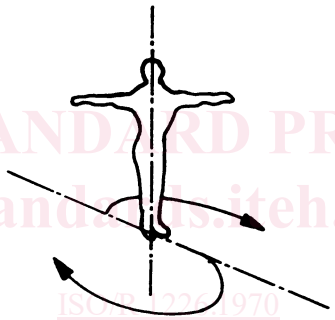

iTeh STANDARD PREVIEW
(standards.iteh.ai)
ISO/R 1226:1970
https://standards.iteh.ai/catalog/standards/sist/7cf75-4c05-44f3-9620-e41496b7c6fe/iso-r-1226-1970

FIG. 8

Y.1.2 Anticlockwise

The anticlockwise vertical rotation was symbolized by the figure 6 because this number follows immediately the number 5 in the natural series of numbers.

Y.2 IDENTIFICATION OF FACE

Y.2.1 Opening face

For the same reasons the zero (0) was selected for its symbolic shape similar to the letter O, initial letter of the word "open" in most European languages : open – ouvrir – otkryt* – öffnen, etc.

Y.2.2 Closing face

Since the word "close" in most European languages : close – fermer – zatkryt* – schliessen, etc. does not include any common initial letter, the figure one (1) was selected for its symbolic shape (bar) and also because this number follows immediately the zero in the natural series of numbers.

---

* Transliteration of Cyrillic characters according to ISO Recommendation R 9.