SLOVENSKI STANDARD
SIST EN 14713:2016

01-oktober-2016

Nadomešča:

SIST EN 14713:2006

Lepila za papir in karton za embalažo ter za higienske proizvode za enkratno uporabo - Določanje frikcijskih lastnosti filmov, ki naj bi bili sposobni lepljenja

Adhesives for paper and board, packaging and disposable sanitary products - Determination of friction properties of films potentially suitable for bonding

Klebstoffe für Papier und Pappe, Verpackung und Hygieneprodukte - Bestimmung des Reibungsverhaltens potentiell klebefähiger Schichten

Adhésifs pour papier et carton, emballage et produits sanitaires jetables - Détermination des propriétés de frottement de films potentiellement adaptés au collage

Ta slovenski standard je istoveten z: EN 14713:2016

ICS:

55.040	Materiali in pripomočki za pakiranje	Packaging materials and accessories
83.180	Lepila	Adhesives

SIST EN 14713:2016 **en,fr,de**

EUROPEAN STANDARD
NORME EUROPÉENNE
EUROPÄISCHE NORM

EN 14713

August 2016

ICS 83.180

Supersedes EN 14713:2005

English Version

Adhesives for paper and board, packaging and disposable sanitary products - Determination of friction properties of films potentially suitable for bonding

Adhésifs pour papier et carton, emballage et produits sanitaires jetables - Détermination des propriétés de frottement de films potentiellement adaptés au collage

Klebstoffe für Papier und Pappe, Verpackung und Hygieneprodukte - Bestimmung des Reibungsverhaltens potentiell klebefähiger Schichten

This European Standard was approved by CEN on 6 May 2016.

CEN members are bound to comply with the CEN/CENELEC Internal Regulations which stipulate the conditions for giving this European Standard the status of a national standard without any alteration. Up-to-date lists and bibliographical references concerning such national standards may be obtained on application to the CEN-CENELEC Management Centre or to any CEN member.

This European Standard exists in three official versions (English, French, German). A version in any other language made by translation under the responsibility of a CEN member into its own language and notified to the CEN-CENELEC Management Centre has the same status as the official versions.

CEN members are the national standards bodies of Austria, Belgium, Bulgaria, Croatia, Cyprus, Czech Republic, Denmark, Estonia, Finland, Former Yugoslav Republic of Macedonia, France, Germany, Greece, Hungary, Iceland, Ireland, Italy, Latvia, Lithuania, Luxembourg, Malta, Netherlands, Norway, Poland, Portugal, Romania, Slovakia, Slovenia, Spain, Sweden, Switzerland, Turkey and United Kingdom.

EUROPEAN COMMITTEE FOR STANDARDIZATION
COMITÉ EUROPÉEN DE NORMALISATION
EUROPÄISCHES KOMITEE FÜR NORMUNG

CEN-CENELEC Management Centre: Avenue Marnix 17, B-1000 Brussels

Contents

Page

European foreword 3
Introduction 4
1 Scope 5
2 Normative references 5
3 Terms and definitions 5
4 Apparatus 6
5 Test specimens 8
5.1 Sampling 8
5.2 Preparation of test specimens 8
6 Procedure 9
6.1 General 9
6.2 Friction measurement A: Coating against coating 9
6.3 Friction measurement B: Coating against the uncoated side of the test specimen or surface of other material 9
7 Expression of results 9
7.1 Static friction 9
7.2 Dynamic friction 10
8 Test report 10
Bibliography 11

European foreword

This document (EN 14713:2016) has been prepared by Technical Committee CEN/TC 193 “Adhesives”, the secretariat of which is held by AENOR.

This European Standard shall be given the status of a national standard, either by publication of an identical text or by endorsement, at the latest by February 2017, and conflicting national standards shall be withdrawn at the latest by February 2017.

Attention is drawn to the possibility that some of the elements of this document may be the subject of patent rights. CEN shall not be held responsible for identifying any or all such patent rights.

This document supersedes EN 14713:2005.

According to the CEN-CENELEC Internal Regulations, the national standards organisations of the following countries are bound to implement this European Standard: Austria, Belgium, Bulgaria, Croatia, Cyprus, Czech Republic, Denmark, Estonia, Finland, Former Yugoslav Republic of Macedonia, France, Germany, Greece, Hungary, Iceland, Ireland, Italy, Latvia, Lithuania, Luxembourg, Malta, Netherlands, Norway, Poland, Portugal, Romania, Slovakia, Slovenia, Spain, Sweden, Switzerland, Turkey and the United Kingdom.

Introduction

The friction behaviour is described by a characteristic coefficient of friction, independent of the test apparatus and test conditions. As the coefficient of friction of potentially adhesive films or layers may be a function of the normal force, F_N, and the contact surface and, in the case of dynamic friction, also of the relative speed and other dynamic parameters, these parameters have also been specified in this European Standard.

The tests can be carried out with the potentially adhesive layers sliding over themselves or coated side over the reverse side of a substrate or other surfaces of metals or plastics.

The coefficient of friction does not allow a comprehensive assessment to be made of the machinability on packaging or processing machines as under the conditions encountered in practice, the friction phenomena are generally accompanied by other effects, e.g. electrostatic charges, air cushion, local rise of temperature, abrasion, etc.

SAFETY STATEMENT — Persons using this document should be familiar with the normal laboratory practice, if applicable. This document does not purport to address all of the safety problems, if any, associated with its use. It is the responsibility of the user to establish appropriate safety and health practices and to ensure compliance with any regulatory conditions.

ENVIRONMENTAL STATEMENT — It is understood that some of the material permitted in this standard may have negative environmental impact. As technological advantages lead to acceptable alternatives for these materials, they will be eliminated from this standard to the extent possible.

At the end of the test, the user of the standard should take care to carry out an appropriate disposal of the wastes, according to local regulation.

1 Scope

This European Standard specifies test methods to assess the coefficients of friction of potentially adhesive films or layers, such as coatings with reactivable adhesives, hot melts or waxes, for use with paper and board, packaging and disposable sanitary products.

2 Normative references

The following documents, in whole or in part, are normatively referenced in this document and are indispensable for its application. For dated references, only the edition cited applies. For undated references, the latest edition of the referenced document (including any amendments) applies.

EN 1067, *Adhesives - Examination and preparation of samples for testing*

EN ISO 15605, *Adhesives - Sampling (ISO 15605:2000)*

3 Terms and definitions

For the purposes of this document, the following terms and definitions apply.

3.1
friction
resistance against sliding of two surfaces in contact with each other

Note 1 to entry: A distinction is made between static friction and dynamic friction.

3.2
static friction
threshold value of the friction between two relatively static bodies, where the force applied is insufficient to cause relative motion which has to be overcome at the onset of sliding motion

3.3
dynamic friction
friction between two bodies in relative motion to each other which remains after the static friction has been overcome at the given sliding speed

3.4
static frictional force
F_S
force necessary to overcome the static friction

3.5
dynamic frictional force
F_D
force necessary to overcome the dynamic friction

3.6
normal force
F_N
force acting perpendicularly to the two surfaces in contact

3.7
coefficient of friction
ratio of the frictional force to the normal force

3.8
static coefficient of friction
μ_S
ratio of the static frictional force to the normal force

3.9
dynamic coefficient of friction
μ_D
ratio of the dynamic frictional force to the normal force

4 Apparatus

Specimens shall be conditioned for 24 h at 23 °C and 50% RH.

The test apparatus consists generally of a driving mechanism to produce a uniform relative motion between two sliding surfaces and a load cell to record the frictional force.

The relative motion between the two surfaces may be produced in any suitable way, e.g. by means of a moving table (see Figure 1a)) or by moving the measuring device in the opposite direction. Even the vertical motion of a tensile testing machine may be utilized if the frictional force or the motion that induces the friction is deflected in the vertical direction by a pulley (see Figure 1b).

The force is recorded continuously by means of a suitable recording device.

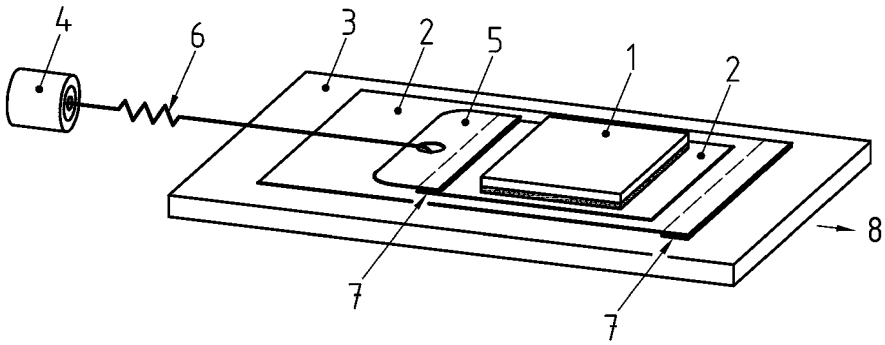

a) horizontal motion

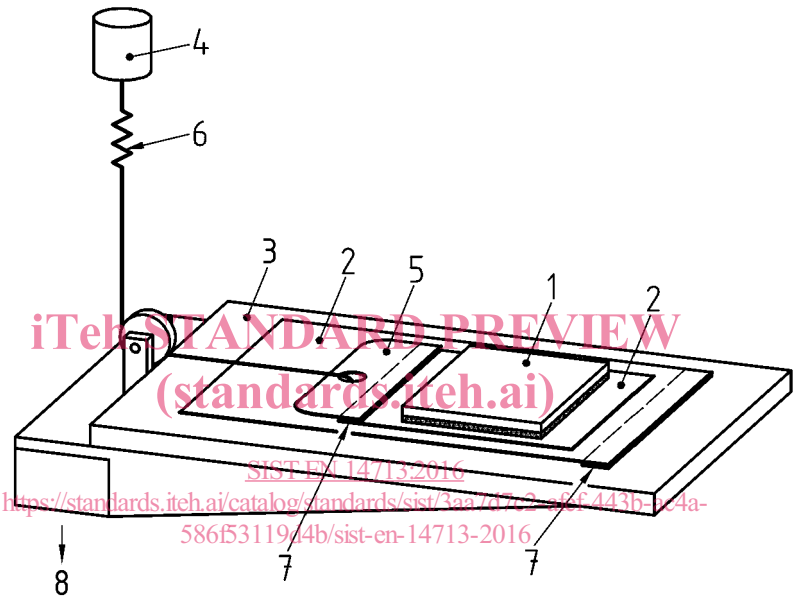

b) vertical motion

Key

1 sledge

2 test specimens

3 testing table (rigid or movable)

4 load cell

5 reinforcement plate

6 spring

7 double-faced adhesive tape

8 direction of motion

Figure 1 — Test apparatus for the determination of friction properties