ETSI TS 129 171 V15.4.0 (2020-01)

Digital cellular telecommunications system (Phase 2+) (GSM);
Universal Mobile Telecommunications System (UMTS);
LTE;
Location Services (LCS);
LCS Application Protocol (LCS-AP)
between the Mobile Management Entity (MME)
and Evolved Serving Mobile Location Centre (E-SMLC);
SLs interface
(3GPP TS 29.171 version 15.4.0 Release 15)

3GPP 5G
A GLOBAL INITIATIVE

Reference
RTS/TSGC-0429171vf40

Keywords
GSM,LTE,UMTS

ETSI

650 Route des Lucioles
F-06921 Sophia Antipolis Cedex - FRANCE

Tel.: +33 4 92 94 42 00 Fax: +33 4 93 65 47 16

Siret N° 348 623 562 00017 - NAF 742 C
Association à but non lucratif enregistrée à la
Sous-Préfecture de Grasse (06) N° 7803/88

Important notice

The present document can be downloaded from:
http://www.etsi.org/standards-search

The present document may be made available in electronic versions and/or in print. The content of any electronic and/or print versions of the present document shall not be modified without the prior written authorization of ETSI. In case of any existing or perceived difference in contents between such versions and/or in print, the prevailing version of an ETSI deliverable is the one made publicly available in PDF format at www.etsi.org/deliver.

Users of the present document should be aware that the document may be subject to revision or change of status. Information on the current status of this and other ETSI documents is available at
https://portal.etsi.org/TB/ETSIDeliverableStatus.aspx

If you find errors in the present document, please send your comment to one of the following services:
https://portal.etsi.org/People/CommiteeSupportStaff.aspx

Copyright Notification

Intellectual Property Rights

Essential patents

IPRs essential or potentially essential to normative deliverables may have been declared to ETSI. The information pertaining to these essential IPRs, if any, is publicly available for **ETSI members and non-members**, and can be found in ETSI SR 000 314: *"Intellectual Property Rights (IPRs); Essential, or potentially Essential, IPRs notified to ETSI in respect of ETSI standards"*, which is available from the ETSI Secretariat. Latest updates are available on the ETSI Web server (https://ipr.etsi.org/).

Pursuant to the ETSI IPR Policy, no investigation, including IPR searches, has been carried out by ETSI. No guarantee can be given as to the existence of other IPRs not referenced in ETSI SR 000 314 (or the updates on the ETSI Web server) which are, or may be, or may become, essential to the present document.

Trademarks

The present document may include trademarks and/or tradenames which are asserted and/or registered by their owners. ETSI claims no ownership of these except for any which are indicated as being the property of ETSI, and conveys no right to use or reproduce any trademark and/or tradename. Mention of those trademarks in the present document does not constitute an endorsement by ETSI of products, services or organizations associated with those trademarks.

Legal Notice

This Technical Specification (TS) has been produced by ETSI 3rd Generation Partnership Project (3GPP).

The present document may refer to technical specifications or reports using their 3GPP identities. These shall be interpreted as being references to the corresponding ETSI deliverables.

The cross reference between 3GPP and ETSI identities can be found under http://webapp.etsi.org/key/queryform.asp.

Modal verbs terminology

In the present document "**shall**", "**shall not**", "**should**", "**should not**", "**may**", "**need not**", "**will**", "**will not**", "**can**" and "**cannot**" are to be interpreted as described in clause 3.2 of the ETSI Drafting Rules (Verbal forms for the expression of provisions).

"**must**" and "**must not**" are **NOT** allowed in ETSI deliverables except when used in direct citation.

Contents

Foreword

This Technical Specification has been produced by the 3rd Generation Partnership Project (3GPP).

The contents of the present document are subject to continuing work within the TSG and may change following formal TSG approval. Should the TSG modify the contents of the present document, it will be re-released by the TSG with an identifying change of release date and an increase in version number as follows:

Version x.y.z

where:

x the first digit:

1 presented to TSG for information;

2 presented to TSG for approval;

3 or greater indicates TSG approved document under change control.

y the second digit is incremented for all changes of substance, i.e. technical enhancements, corrections, updates, etc.

z the third digit is incremented when editorial only changes have been incorporated in the document.

1 Scope

The present document specifies the procedures and information coding for LCS Application Protocol (LCS-AP) that is needed to support the location services in E-UTRAN. The LCS-AP message set is applicable to the SLs interface between the E-SMLC and the MME. LCS-AP is developed in accordance to the general principles stated in 3GPP TS 23.271 [3].

2 References

The following documents contain provisions which, through reference in this text, constitute provisions of the present document.

- References are either specific (identified by date of publication, edition number, version number, etc.) or non-specific.
- For a specific reference, subsequent revisions do not apply.
- For a non-specific reference, the latest version applies. In the case of a reference to a 3GPP document (including a GSM document), a non-specific reference implicitly refers to the latest version of that document *in the same Release as the present document*.

[1] 3GPP TR 21.905: "Vocabulary for 3GPP Specifications".

[2] 3GPP TS 36.305: "Stage 2 functional specification of User Equipment (UE) positioning in E-UTRAN".

[3] 3GPP TS 23.271: "Functional stage 2 description of Location Services (LCS)".

[4] IETF RFC 4960: "Stream Control Transmission Protocol".

[5] TIA/EIA/IS-J-STD-036 (2000): "Wireless Enhanced Emergency Services".

[6] 3GPP TS 23.032: "Universal Geographical Area Description (GAD)".

[7] 3GPP TS 36.413: "S1 Application Protocol (S1AP)".

[8] ITU-T Recommendation X.680 (07/2002): "Information Technology - Abstract Syntax Notation One (ASN.1): Specification of basic notation".

[9] ITU-T Recommendation X.681 (07/2002): "Information Technology - Abstract Syntax Notation One (ASN.1): Information object specification".

[10] 3GPP TS 22.071: "Location Services (LCS); Service Description; Stage1".

[11] 3GPP TS 23.003: "Numbering, addressing and identification".

[12] ITU-T Recommendation X.691 (07/2002): "Information Technology - ASN.1 encoding rules - Specification of Packed Encoding Rules (PER)".

[13] IETF RFC 4119: "A Presence-based GEOPRIV Location Object Format".

[14] IETF RFC 5139: "Revised Civic Location Format for Presence Information Data Format Location Object".

[15] IETF RFC 6848: "Specifying Civic Address Extensions in the Presence Information Data Format Location Object (PIDF-LO)".

[16] IETF RFC 5905: "Network Time Protocol Version 4: Protocol and Algorithms Specification".

[17] 3GPP TS 24.301: "Non-Access-Stratum (NAS) protocol for Evolved Packet System (EPS); Stage 3".

3 Definitions and abbreviations

3.1 Definitions

For the purposes of the present document, the terms and definitions given in TR 21.905 [1] and the following apply. A term defined in the present document takes precedence over the definition of the same term, if any, in TR 21.905 [1].

Elementary Procedure: LCS-AP protocol consists of Elementary Procedures (EPs). An LCS-AP Elementary Procedure is a unit of interaction between the MME and the E-SMLC. An EP consists of an initiating message and possibly a response message. Two kinds of EPs are used:

- **Class 1:** Elementary Procedures with response (success or failure),
- **Class 2:** Elementary Procedures without response.

3.2 Abbreviations

For the purposes of the present document, the abbreviations given in TR 21.905 [1] and the following apply. An abbreviation defined in the present document takes precedence over the definition of the same abbreviation, if any, in TR 21.905 [1].

CID	Cell-ID (positioning method)
E-CID	Enhanced Cell-ID (positioning method)
E-SMLC	Enhanced Serving Mobile Location Centre
E-UTRAN	Envolved Universal Terrestrial Radio Access Network
GNSS	Global Navigation Satellite System
GPS	Global Positioning System
LCS	LoCation Services
LCS-AP	LCS Application Protocol
LPP	LTE Positioning Protocol
LPPa	LTE Positioning Protocol Annex
LTE	Long Term Evolution
MBS	Metropolitan Beacon System
MO-LR	Mobile Originated Location Request
MT-LR	Mobile Terminated Location Request
NI-LR	Network Induced Location Request
MME	Mobility Management Entity
OTDOA	Observed Time Difference Of Arrival
PDU	Protocol Data Unit
SCTP	Stream Control Transmission Protocol
SET	SUPL Enabled Terminal
SLP	SUPL Location Platform
SUPL	Secure User Plane Location
TA	Timing Advanced
UE	User Equipment
U-TDOA	Uplink Time Difference Of Arrival

4 Functional Overview

4.1 General

Figure 4.1-1 below shows the architecture applicable to the positioning of a UE with E-UTRAN access. The SLs interface is used to convey LCS-AP messages and parameters between the MME to the E-SMLC. It is also used for tunnelling LTE Positioning Protocols (LPP between the E-SMLC and the target UE, LPPa between the E-SMLC and the eNB), which are transparent to the MME as described in 3GPP TS 36.305 [2].

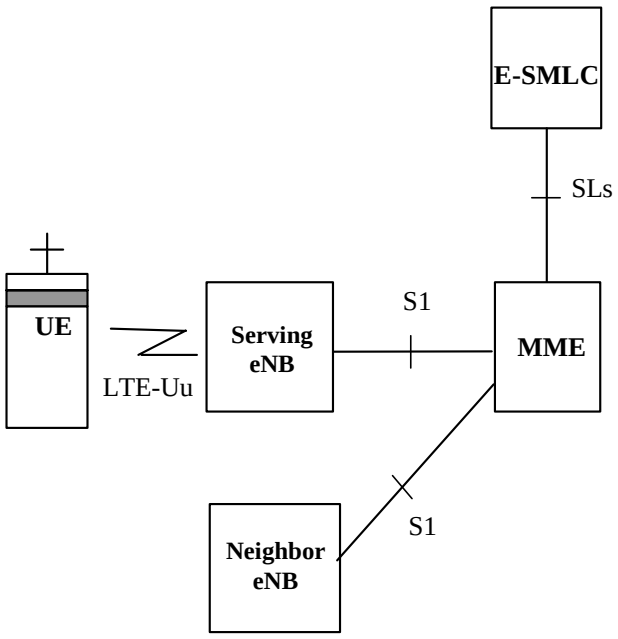

Figure 4.1-1 Positioning Interfaces in E-UTRAN

5 LCS-AP Message Transport

5.1 General

The LCS-AP is a logical interface between the MME and the E-SMLC. This clause specifies the standards for signaling transport to be used across LCS-AP.

5.2 Protocol Layering

Figure 5.2-1 below shows the protocol layering used to support the transfer of LCS-AP PDUs between an E-SMLC and a MME. The LTE Positioning Protocols (LPP and LPPa) can be carried in LCS-AP messages which are transparent to the MME.

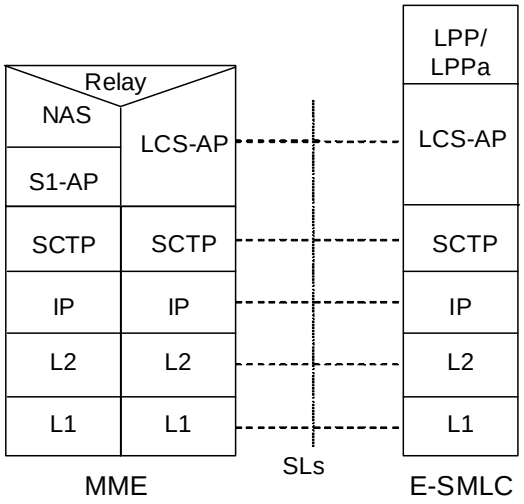

Figure 5.2-1 Protocol Layering for LCS-AP

5.3 Usage of SCTP Associations

SCTP (see IETF RFC 4960 [4]) shall be supported as the transport layer of LCS-AP messages.

Semi-permanent SCTP associations shall be established between MME and E-SMLC, i.e. the SCTP associations shall remain up under normal circumstances.

Local multi-homing should be supported. Remote multi-homing shall be supported.

Multiple local SCTP endpoints may be supported. Multiple remote SCTP endpoints shall be supported. When multiple local or remote SCTP endpoints are configured, several simultaneous SCTP associations shall be supported between MME and E-SMLC.

The MME shall establish the SCTP association. Since under normal operation there should always be an SCTP association established between an MME and an E-SMLC, if the E-SMLC needs to initiate a message towards an MME it shall do so over an existing SCTP association already established with that MME.

When an entity detects that an SCTP association has been lost, all resources for transactions open on that association shall be released.

The registered port number for LCS-AP is 9082. The registered payload protocol identifier for LCS-AP is 29.

6 LCS-AP Procedures

6.1 General

The LCS-AP interface can be divided into the following procedures:

- Location service request procedure
- Location information exchange procedure

The E-UTRAN positioning capabilities are intended to be forward compatible to other access types and other position methods, in an effort to reduce the amount of additional positioning support needed in the future.

6.2 Procedures Applicable to LCS-AP

6.2.1 Location Service Request

6.2.1.1 General

The purpose of the location service request procedure is to obtain the location estimate for a target UE in E-UTRAN.

6.2.1.2 Successful Operation

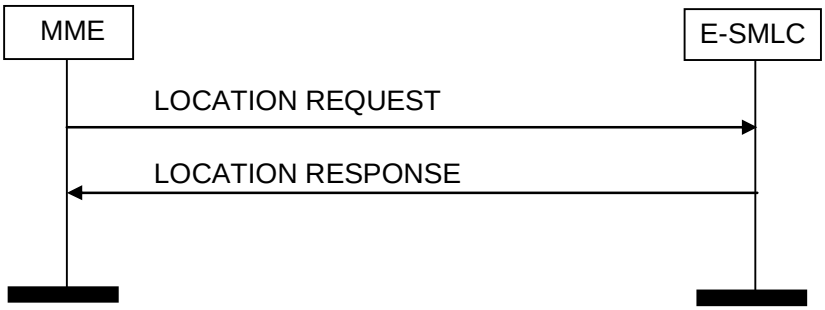

Figure 6.2.1.2-1 Location Service Request Procedure, Successful Operation

The initiator (MME) of the location service request procedure sends a LCS-AP Location Request message to the E-SMLC associated with the current or last known serving cell for the target UE and starts the timer T3x01. The message contains the following mandatory (M), conditional (C) and optional (O) information, where conditional parameters are required if available.

- Correlation ID (M)
- Location Type (M)
- Cell Identifier (M)
- LCS Client Type (C)
- LCS Priority (C)
- LCS Service Type ID (C)
- LCS QoS (C)
- UE Positioning Capability (O)
- Include Velocity (O)
- IMSI of target UE (O)
- IMEI of target UE (O)
- APDU (O)
- RAT Type (O)
- Coverage Level (O)

The Correlation ID is assigned by the MME and enables association of the location response with the location request when more than one location service request procedure is ongoing for the UE with the same E-SMLC.

The Location Type IE indicates the type of Location Information being requested. The following types are supported:

- Current geographic location estimate
- Location assistance data for the target UE
- Last known location estimate

If the location estimate is requested, the E-SMLC performs positioning procedure on the target UE using a particular position method or a combination of more than one positioning method based on the UE capability. If UE capability is unknown, the E-SMLC may request UE position capability through LPP as defined in 3GPP TS 36.305 [2].

Alternatively, if assistance data was requested, the E-SMLC may provide positioning assistance data to the UE. The E-SMLC may invoke the following LCS-AP procedures to get assistance data:

- Connection Oriented Information Transfer
- Connectionless Information Transfer

Otherwise, if a last known location estimate is requested, the E-SMLC obtains a geographic location estimate using only the information provided in the LCS-AP Location Request message. The E-SMLC shall not attempt to obtain location information for the target UE from either the E-UTRAN or the target UE (e.g. because the UE may not be currently reachable).

If a location estimate or a last known location estimate was requested and was subsequently obtained, the E-SMLC shall return a LCS-AP Location Response to the initiator of the location request using the same SCTP association as the location request. This message contains the following mandatory (M), conditional (C) and optional parameters (O).

- Correlation ID (M)

- Location Estimate (M).
- Accuracy Fulfilment Indicator (O).
- Velocity estimate (C).
- Positioning Data (C).
- E-UTRAN Cell Identifier (O).
- Cell Portion ID (O).
- Civic Address (O).
- Barometric Pressure (O).

If assistance data was instead requested for an UE and the E-SMLC was able successfully to transfer this to the UE, the E-SMLC shall return a LCS-AP Location Response to the initiator of the location request (MME). This message shall contain no parameters. The absence of a LCS Cause parameter in this case implies that the transfer was successful.

If the MME receives the LCS-AP Location Response for corresponding request message, the MME shall stop the timer T3x01.

6.2.1.3 Unsuccessful Operation

If the E-SMLC is unable to obtain any of the location information requested or if requested LCS assistance data could not be transferred, the E-SMLC shall return a LCS-AP Location Response to the initiator of the Location Request carrying the following parameters:

- Correlation ID (M)
- LCS Cause (M)
- Positioning Data (O)

The E-SMLC shall use the same SCTP association for the Location Response as was used for the request.

If the MME receives the LCS-AP Location Response for corresponding request message, the MME shall stop the timer T3x01.

On the expiry of the timer T3x01, the MME shall abort the procedure, release any resources allocated for this location request procedure and notify the node that triggered the Location Request about the error.

6.2.2 Location Information Exchange

6.2.2.1 Connection Oriented Information Transfer

6.2.2.1.1 General

The Connection Oriented Information transfer procedure enables two-way transfer of LPP and LPPa messages between an E-SMLC and a MME. The procedure is only valid while a location request procedure for the target UE is ongoing. This procedure makes use of the same SCTP association as the location request procedure for the particular target UE.