SLOVENSKI STANDARD
SIST EN 4710-003:2015

01-december-2015

Aeronavtika - Spončni sistemi za hitro sprostitev za nestrukturne aplikacije - 003. del: Vzmetna objemka

Aerospace series - Quick release fastening systems for non-structural applications - Part 003: Spring clamp

Luft- und Raumfahrt - Druckverschlüsse nicht-strukturelle Anwendungen - Teil 003: Feder Clip

Série aérospatiale - Fixations rapides filetées pour applications non-structurales - Partie 003: Collier lyre

Ta slovenski standard je istoveten z: EN 4710-03:2015

ICS:

49.030.01 Vezni elementi na splošno Fasteners in general

SIST EN 4710-003:2015 en,fr,de

EUROPEAN STANDARD

NORME EUROPÉENNE

EUROPÄISCHE NORM

EN 4710-03

October 2015

ICS 49.035

English Version

Aerospace series - Quick release fastening systems for non-structural applications - Part 03: Spring clamp

Série aérospatiale - Fixations rapides filetées pour applications non-structurales - Partie 03: Collier lyre

Luft- und Raumfahrt - Druckverschlüsse nicht-strukturelle Anwendungen - Teil 03: Federclip

This European Standard was approved by CEN on 5 March 2015.

CEN members are bound to comply with the CEN/CENELEC Internal Regulations which stipulate the conditions for giving this European Standard the status of a national standard without any alteration. Up-to-date lists and bibliographical references concerning such national standards may be obtained on application to the CEN-CENELEC Management Centre or to any CEN member.

This European Standard exists in three official versions (English, French, German). A version in any other language made by translation under the responsibility of a CEN member into its own language and notified to the CEN-CENELEC Management Centre has the same status as the official versions.

CEN members are the national standards bodies of Austria, Belgium, Bulgaria, Croatia, Cyprus, Czech Republic, Denmark, Estonia, Finland, Former Yugoslav Republic of Macedonia, France, Germany, Greece, Hungary, Iceland, Ireland, Italy, Latvia, Lithuania, Luxembourg, Malta, Netherlands, Norway, Poland, Portugal, Romania, Slovakia, Slovenia, Spain, Sweden, Switzerland, Turkey and United Kingdom.

EUROPEAN COMMITTEE FOR STANDARDIZATION
COMITÉ EUROPÉEN DE NORMALISATION
EUROPÄISCHES KOMITEE FÜR NORMUNG

CEN-CENELEC Management Centre: Avenue Marnix 17, B-1000 Brussels

Contents

Page

European foreword

This document (EN 4710-03:2015) has been prepared by the Aerospace and Defence Industries Association of Europe - Standardization (ASD-STAN).

After enquiries and votes carried out in accordance with the rules of this Association, this Standard has received the approval of the National Associations and the Official Services of the member countries of ASD, prior to its presentation to CEN.

This European Standard shall be given the status of a national standard, either by publication of an identical text or by endorsement, at the latest by April 2016, and conflicting national standards shall be withdrawn at the latest by April 2016.

Attention is drawn to the possibility that some of the elements of this document may be the subject of patent rights. CEN [and/or CENELEC] shall not be held responsible for identifying any or all such patent rights.

According to the CEN-CENELEC Internal Regulations, the national standards organizations of the following countries are bound to implement this European Standard: Austria, Belgium, Bulgaria, Croatia, Cyprus, Czech Republic, Denmark, Estonia, Finland, Former Yugoslav Republic of Macedonia, France, Germany, Greece, Hungary, Iceland, Ireland, Italy, Latvia, Lithuania, Luxembourg, Malta, Netherlands, Norway, Poland, Portugal, Romania, Slovakia, Slovenia, Spain, Sweden, Switzerland, Turkey and the United Kingdom.

1 Scope

This standard specifies the dimensions, mass, tolerances and static values of catch spring for use in fuselage interior equipment and non-structural or secondary structural area. This standard part shall be used in conjunction with EN 4710-06 and EN 4710-07 as described in EN 4710-02.

The applicable temperature range is –55 °C to 85 °C.

2 Normative references

The following documents, in whole or in part, are normatively referenced in this document and are indispensable for its application. For dated references, only the edition cited applies. For undated references, the latest edition of the referenced document (including any amendments) applies.

EN 2424, *Aerospace series — Marking of aerospace products*

EN 2516, *Aerospace series — Passivation of corrosion resistant steels and decontamination of nickel base alloys*

EN 4710-01, *Aerospace series — Quick release fastening systems for non-structural applications — Part 01: Technical specification*

EN 4710-02, *Aerospace series — Quick release fastening systems for non-structural applications — Part 02: Stud spring clamp family*

EN 4710-06, *Aerospace series — Quick release fastening systems for non-structural applications — Part 06: Stud - quick-release and locking*

EN 4710-07, *Aerospace series — Quick release fastening systems for non-structural applications — Part 07: Retaining grommet*

EN 10151, *Stainless steel strip for springs — Technical delivery conditions*

EN 10132-4, *Cold-rolled narrow steel strip for heat-treatment — Technical delivery conditions — Part 4: Spring steels and other applications*

ISO 2768-1:1989, *General tolerances — Part 1: Tolerances for linear and angular dimensions without individual tolerance indications*

ISO 2768-2:1989, *General tolerances — Part 2: Geometrical tolerances for features without individual tolerance indications*

DIN 50979, *Metallic coatings — Electroplated coatings of zinc and zinc alloys on iron or steel with supplementary Cr(VI)-free treatment*

3 Requirements

3.1 Configuration, dimensions, tolerances and mass

The configuration, dimensions, tolerances and mass shall conform with Figure 1 and Table 1. Tolerances not specified, shall be in accordance with ISO 2768-mK (ISO 2768-1:1989 and ISO 2768-2:1989). Dimensions are unless otherwise specified per manufacturer's option.

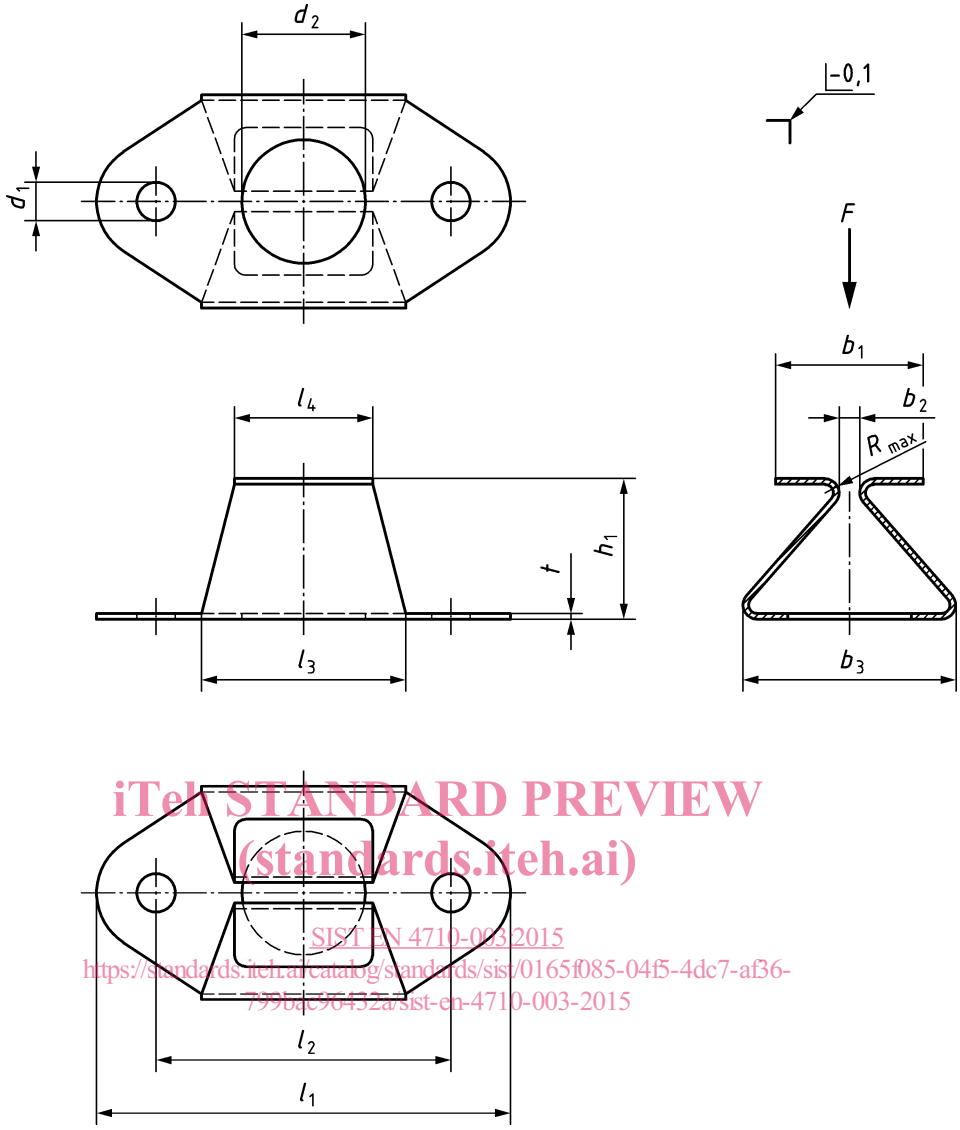

Key

F load direction

Figure 1 — Configuration spring clamp Cx

Table 1 — Dimensions and mass

Dimensions in millimetres

Type code	**Plate code** [a]	b_1 ± 0,4	b_2	b_3 ± 0,3	∅ d_1	∅ d_2 ± 0,1	h_1	l_1	l_2 ± 0,1	l_3 ± 0,3	l_4 ± 0,3	t	$R_{max.}$	**Mass** approximate *g*
CS	3	5,0	0,8 ± 0,2	9,5	2,6	5,0	6,2	19,3	12,8	8,5	6,2	0,3	0,6	0,4
CM	4	7,0	1,2 ± 0,3	13,7	2,6	7,8	10,2	25,7	17,5	12,2	9,0	0,4	1,0	1,7
CL	5	13,0	1,8 ± 0,4	18,8	3,4	10,9	12,4	36,5	26,0	18,0	12,2	0,5	1,2	3,8

[a] Plate code is according to dimension *t*.

3.2 Mechanical characteristics

Ultimate loads, see Table 2.

Table 2 — Loads

Type code	Ultimate loads *F* N	Material code
CS	500	A
		S
CM	900	A
		S
CL	2 000	A
		S

3.3 Materials and surface treatment

Materials and finished shall be in accordance with the Table 3.

Table 3 — Materials and surface treatment

Material code	Material	Surface treatment
S	Stainless steel 1.4310 per EN 10151	Passivated per EN 2516
A	Alloy steel 1.0605 per EN 10132-4 or Alloy steel 1.1248 per EN 10132-4	Electro plated coating per DIN 50979