DRAFT INTERNATIONAL STANDARD

ISO/DIS 6103

ISO/TC **29**/SC **5**	Secretariat: **DIN**
Voting begins on: **2013-09-05**	Voting terminates on: **2014-02-05**

Bonded abrasive products — Permissible unbalances of grinding wheels as delivered — Static testing

Produits abrasifs agglomérés — Balourds admissibles des meules en état de livraison — Contrôle statique

[Revision of third edition (ISO 6103:2005)]

ICS: 25.100.70

iTeh STANDARD PREVIEW
(standards.iteh.ai)
Full standard:
https://standards.iteh.ai/catalog/standards/sist/1c6f4f8e-4cf6-4945-893e-039dbffac1b7/iso-6103-2014

ISO/CEN PARALLEL PROCESSING

This draft has been developed within the International Organization for Standardization (ISO), and processed under the **ISO lead** mode of collaboration as defined in the Vienna Agreement.

This draft is hereby submitted to the ISO member bodies and to the CEN member bodies for a parallel five month enquiry.

Should this draft be accepted, a final draft, established on the basis of comments received, will be submitted to a parallel two-month approval vote in ISO and formal vote in CEN.

To expedite distribution, this document is circulated as received from the committee secretariat. ISO Central Secretariat work of editing and text composition will be undertaken at publication stage.

THIS DOCUMENT IS A DRAFT CIRCULATED FOR COMMENT AND APPROVAL. IT IS THEREFORE SUBJECT TO CHANGE AND MAY NOT BE REFERRED TO AS AN INTERNATIONAL STANDARD UNTIL PUBLISHED AS SUCH.

IN ADDITION TO THEIR EVALUATION AS BEING ACCEPTABLE FOR INDUSTRIAL, TECHNOLOGICAL, COMMERCIAL AND USER PURPOSES, DRAFT INTERNATIONAL STANDARDS MAY ON OCCASION HAVE TO BE CONSIDERED IN THE LIGHT OF THEIR POTENTIAL TO BECOME STANDARDS TO WHICH REFERENCE MAY BE MADE IN NATIONAL REGULATIONS.

RECIPIENTS OF THIS DRAFT ARE INVITED TO SUBMIT, WITH THEIR COMMENTS, NOTIFICATION OF ANY RELEVANT PATENT RIGHTS OF WHICH THEY ARE AWARE AND TO PROVIDE SUPPORTING DOCUMENTATION.

Reference number
ISO/DIS 6103:2013(E)

© ISO 2013

iTeh STANDARD PREVIEW
(standards.iteh.ai)
Full standard:
https://standards.iteh.ai/catalog/standards/sist/1c6f4f8e-4cf6-4945-893e-039dbffac1b7/iso-6103-2014

Copyright notice

This ISO document is a Draft International Standard and is copyright-protected by ISO. Except as permitted under the applicable laws of the user's country, neither this ISO draft nor any extract from it may be reproduced, stored in a retrieval system or transmitted in any form or by any means, electronic, photocopying, recording or otherwise, without prior written permission being secured.

Requests for permission to reproduce should be addressed to either ISO at the address below or ISO's member body in the country of the requester.

ISO copyright office
Case postale 56 • CH-1211 Geneva 20
Tel. + 41 22 749 01 11
Fax + 41 22 749 09 47
E-mail copyright@iso.org
Web www.iso.org

Reproduction may be subject to royalty payments or a licensing agreement.

Violators may be prosecuted.

© ISO 2013 – All rights reserved

Contents

Page

Foreword ..... **iv**

1 Scope **1**

2 Terms and definitions **1**

3 Permissible unbalance, U_a **2**

4 Measuring intrinsic unbalance **3**

5 Checking intrinsic unbalance **4**
5.1 Verification and acceptance **4**
5.2 Determination of m_a **4**
5.3 Acceptance testing of the grinding wheel **4**

Bibliography **7**

iTeh STANDARD PREVIEW
(standards.iteh.ai)
Full standard:
https://standards.iteh.ai/catalog/standards/sist/1c6f4f8e-4cf6-4945-893e-039dbffac1b7/iso-6103-2014

© ISO 2013 – All rights reserved

Foreword

ISO (the International Organization for Standardization) is a worldwide federation of national standards bodies (ISO member bodies). The work of preparing International Standards is normally carried out through ISO technical committees. Each member body interested in a subject for which a technical committee has been established has the right to be represented on that committee. International organizations, governmental and non-governmental, in liaison with ISO, also take part in the work. ISO collaborates closely with the International Electrotechnical Commission (IEC) on all matters of electrotechnical standardization.

International Standards are drafted in accordance with the rules given in the ISO/IEC Directives, Part 2.

The main task of technical committees is to prepare International Standards. Draft International Standards adopted by the technical committees are circulated to the member bodies for voting. Publication as an International Standard requires approval by at least 75 % of the member bodies casting a vote.

Attention is drawn to the possibility that some of the elements of this document may be the subject of patent rights. ISO shall not be held responsible for identifying any or all such patent rights.

ISO 6103 was prepared by Technical Committee ISO/TC 29, Small tools, Subcommittee SC 5, Grinding wheels and abrasives.

This fourth edition cancels and replaces the third edition (ISO 6103:2005), which has been technically revised.

Significant changes from ISO 6103:2005 are as follows:

a) The scope has been amended with respect to minimum outside diameters;

b) The normative references to ISO 603 series have been deleted;

c) types of bonded abrasive products for hand-held grinding machines in 5.2, Table 1 have been amended;

d) diameter ranges in 5.2, Table 1 have been corrected;

e) a bibliography has been added.

iTeh STANDARD PREVIEW
(standards.iteh.ai)
Full standard:
https://standards.iteh.ai/catalog/standards/sist/1c6f4f8e-4cfc-4945-a93e-049dbffac1b7/iso-6103-2014

© ISO 2013 – All rights reserved

Bonded abrasive products — Permissible unbalances of grinding wheels as delivered — Static testing

1 Scope

This International Standard specifies the maximum permissible values of unbalances for bonded abrasive wheels with an outside diameter $D \geq 125$ mm and maximum operating speed $v_s \geq 16$ m/s, in the as-delivered condition

It also specifies the method for measuring the unbalance and the practical method for testing whether a grinding wheel is acceptable or not.

This International Standard is applicable to bonded abrasive wheels in the as-delivered condition.

This International Standard is not applicable to

— diamond, cubic boron nitride or natural stone grinding wheels, or

— centreless control wheels, lapping and disc wheels, ball wheels or glass grinding wheels.

NOTE 1 The values given refer to the grinding wheel itself, independent of any unbalance which may exist in the balancing arbor or in the means of fastening it to this arbor. These various elements, together with the flanges or hub-flanges, are assumed to be balanced, homogeneous and free from geometrical defects.

NOTE 2 The effects of unbalance are basically

— additional stresses on the arbor, the machine and its mounting,

— excessive wear of the bearings,

— vibration prejudicial to the quality of machining and increased internal stresses in the grinding wheel, and increased operator fatigue.

iTeh STANDARD PREVIEW
(standards.iteh.ai)
Full standard:
https://standards.iteh.ai/catalog/standards/sist/1c6f4f8e-4cf6-2045-8953-039dbffac1f7/iso-6103-2014

2 Terms and definitions

For the purposes of this document, the following terms and definitions apply.

2.1
unbalance
product of radius and mass

NOTE 1 to entry: Radius is expressed in millimetres. Mass is expressed in grams. The product of radius and mass is expressed in grams multiplied by millimetres.

2.2
intrinsic unbalance of a grinding wheel
U_i
product of the mass m_1 of the grinding wheel and the distance e between its centre of mass G (centre of gravity) and the axis O of its bore

NOTE 1 to entry: See Figure 1.

© ISO 2013 – All rights reserved

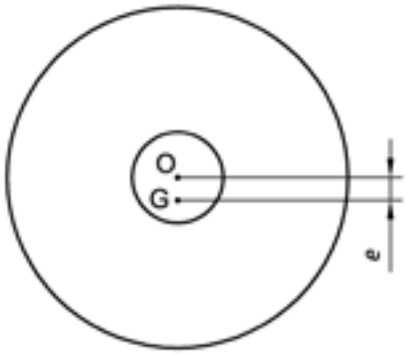

Figure 1 — Intrinsic unbalance of a grinding wheel

2.3
measured unbalance
U_c
product of a mass m_2, affixed to the grinding wheel to balance it and the distance between the centre of mass (G_{m2}) (centre of gravity) of the mass m_2 and the axis O of the grinding wheel bore

NOTE 1 to entry: See Figure 2.

NOTE 2 to entry: In practice, this distance is equal to the radius r of the grinding wheel.

iTeh STANDARD PREVIEW
(standards.iteh.ai)
Full standard:
https://standards.iteh.ai/catalog/standards/sist/1c6f4f8e-4cfc-4945-893e-039dbf8ac1e7/iso-6103-2014

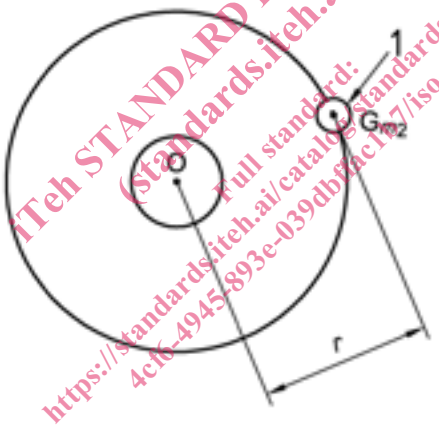

Key
1 Mass m_2

Figure 2 — Measured unbalance

3 Permissible unbalance, U_a

On the basis of experience, the maximum permissible unbalance U_a is determined using a mass $m_a = U_a/r$, such that

$$m_a = k\sqrt{m_1} \quad (1)$$

where

r is the radius of the grinding wheels, in millimetres;
m_a is the mass whose centre is located on the circumference of the grinding wheel, in grams;
m_1 is the mass of the grinding wheel, in grams;
k is a coefficient which depends on the nature and usage of the grinding wheel.

© ISO 2013 – All rights reserved

The values of k are given in table 1 and the values of m_a, as a function of m_1 and k, are shown in Figure 5.

The values of k have been selected on the basis of experience so that the resulting unbalance allows for normal usage of the grinding wheel.

4 Measuring intrinsic unbalance

Place a balancing arbor through the bore of the grinding wheel to hold its mid-plane in a vertical position. For straight wheels or wheels of similar shape, the wheel is free-standing; wheels of other shapes may be supported using suitable flanges.

Rest the balancing arbor on two parallel horizontal bevelled guide-bars or cylindrical bars (see Figure 3), or on a balancing stand consisting of two pairs of overlapping, freely rotating, steel discs (see Figure 4), so that the grinding wheel attains an equilibrium position with minimum friction.

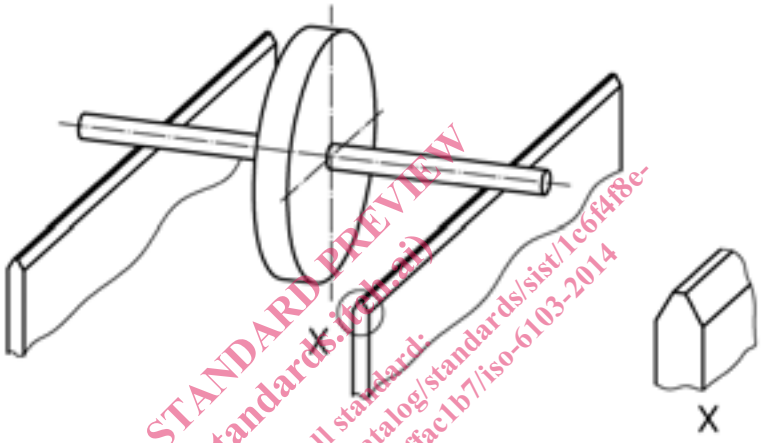

iTeh STANDARD PREVIEW
(standards.iteh.ai)
Full standard:
https://standards.iteh.ai/catalog/standards/sist/1c6f4f8e-4cf6-4945-903e-0

Alternative: The two bevelled guide-bars may be replaced by two cylindrical bars.

Figure 3 — Balancing arbor on guide bars

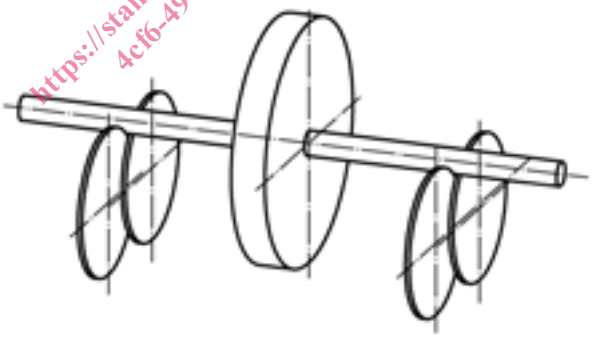

Figure 4 — Balancing arbor on steel discs

The clearance between the balancing arbor and the bore of the grinding wheel shall not exceed 0,4 mm.

The arbor and the supports (guide-bars, bars or discs) shall have an adequate surface hardness and an appropriate surface condition to minimize friction.

When the grinding wheel attains the equilibrium position, its centre of mass is then as low as possible. In this position, mark the upper peripheral point of the grinding wheel.

Rotate the grinding wheel through 90° to bring this mark into the horizontal plane for the arbor axis.

© ISO 2013 – All rights reserved

Determine the mass m_2 which, when affixed to the periphery of the grinding wheel at the mark, maintains the grinding wheel in equilibrium. The amount of unbalance thus introduced, $U_c = m_2 \cdot r$, is equal and opposite to the intrinsic unbalance of the wheel.

The value of the mass m_2 is used to determine the intrinsic unbalance of the wheel using the following formula:

$$U_i = U_c = m_2 \cdot r \quad (2)$$

5 Checking intrinsic unbalance

5.1 Verification and acceptance

Verify the intrinsic unbalance using the method according to Clause 5.

A grinding wheel is only acceptable if its intrinsic unbalance U_i is less than or equal to the permissible unbalance U_a, i.e.

$$U_i \leq U_a \quad (3)$$

The testing is done with a mass

$$m_a = \frac{U_a}{r} \quad (4)$$

5.2 Determination of m_a

From Table 1, determine the coefficient k by reading off the value according to the various parameters related to the grinding wheel and its application.

Figure 5 then gives the values of the mass m_a, in grams, as a function of the mass m_1 of the wheel, in grams, and the coefficient k.

5.3 Acceptance testing of the grinding wheel

With the grinding wheel mounted in accordance with Clause 5, place a mass m_a as determined in 6.2 on the periphery of the grinding wheel at the mark. If the wheel remains stationary or rotates so that the mark is at the bottom, the grinding wheel is accepted: otherwise, it is rejected.

iTeh STANDARD PREVIEW
(standards.iteh.ai)
Full standard:
https://standards.iteh.ai/catalog/standards/sist/1c6f4f8e-4cf6-4045-893e-039dbffacb7/iso-6103-2014

© ISO 2013 – All rights reserved

Table 1 — Values of the coefficient k for bonded abrasive products

Grinding method	Type of machine	Type of bonded abrasive product	Dimensions		Coefficient k for maximum operating speed v_s m/s		
			D mm	T mm	$16 \le v_s \le 40$	$40 < v_s \le 63$	$63 < v_s \le 125$
Grinding (deburring, fettling and snagging)	Hand-held grinding machines	Types 1/4/27/28/29/35 and 36	$125 \le D \le 150$	—	0,40	0,32	0,25
			$150 < D \le 180$	—	0,40	0,32	0,20
			$D > 180$	$T \le 6$	0,40	0,32	0,20
				$T > 6$	0,32	0,25	0,20
		Types 6 and 11	all dimensions		0,40	0,32	—
Grinding (deburring, fettling and snagging)	Stationary grinding machines, swing frame grinding machines and other grinding machines	Types 1/2/35 and 36	all dimensions		0,63	0,50	0,40
High-pressure grinding	Stationary grinding machines	Type 1	all dimensions		0,8		
Grinding – precision grinding – external cylindrical grinding – surface grinding – sharpening	Stationary grinding machines	all types	$125 \le D \le 300$	all dimensions	0,25	0,20	0,16
			$300 < D \le 610$		0,32	0,25	0,20
			$D > 610$		0,40	0,32	0,25
Cutting-off	Hand-held cutting-off machines	Types 41 and 42	$125 \le D \le 406$	—	0,40	0,32	0,20
	Stationary cutting-off machines	Type 41 and 42	$D \le 300$	—	0,50	0,40	0,32
			$D > 300$	—	0,63	0,50	0,40

iTeh STANDARD PREVIEW
(standards.iteh.ai)
Full standard:
https://standards.iteh.ai/catalog/standards/sist/1c6f4f8e-4cf6-4925-893e-03dbffac1b7/iso-6103-2014

© ISO 2013 – All rights reserved