SLOVENSKI STANDARD
SIST EN 12830:2018

01-oktober-2018

Nadomešča:
SIST EN 12830:2001

Registratorji temperature za prevoz, skladiščenje in prodajo blaga, občutljivega za toploto - Preskusi, značilnosti, primernost

Temperature recorders for the transport, storage and distribution of temperature sensitive goods - Tests, performance, suitability

Temperaturregistriergeräte für den Transport, die Lagerung und die Verteilung von temperaturempfindlichen Produkten - Prüfungen, Leistung, Gebrauchstauglichkeit

Enregistreurs de température pour le transport, le stockage et la distribution des marchandises thermosensibles - Essais, performance, aptitude à l'emploi

iTeh STANDARD PREVIEW
(standards.iteh.ai)
SIST EN 12830:2018
https://standards.iteh.ai/catalog/standards/sist/ac4253a6-f3a5-4721-bd6a-c7c1185e45f3/sist-en-12830-2018

Ta slovenski standard je istoveten z: **EN 12830:2018**

ICS:

17.200.20	Instrumenti za merjenje temperature	Temperature-measuring instruments
67.260	Tovarne in oprema za živilsko industrijo	Plants and equipment for the food industry

SIST EN 12830:2018 **en,fr,de**

2003-01.Slovenski inštitut za standardizacijo. Razmnoževanje celote ali delov tega standarda ni dovoljeno.

SIST EN 12830:2018

iTeh STANDARD PREVIEW
(standards.iteh.ai)

SIST EN 12830:2018
https://standards.iteh.ai/catalog/standards/sist/cc4252c6-b3e5-4731-bd6a-c7c1185e45f3/sist-en-12830-2018

SIST EN 12830:2018

EUROPEAN STANDARD

NORME EUROPÉENNE

EUROPÄISCHE NORM

EN 12830

August 2018

ICS 17.200.20; 67.260

Supersedes EN 12830:1999

English Version

Temperature recorders for the transport, storage and distribution of temperature sensitive goods - Tests, performance, suitability

Enregistreurs de température pour le transport, le stockage et la distribution des marchandises thermosensibles - Essais, performance, aptitude à l'emploi

Temperaturregistriergeräte für den Transport, die Lagerung und die Verteilung von temperaturempfindlichen Produkten - Prüfungen, Leistung, Gebrauchstauglichkeit

This European Standard was approved by CEN on 2 March 2018.

CEN members are bound to comply with the CEN/CENELEC Internal Regulations which stipulate the conditions for giving this European Standard the status of a national standard without any alteration. Up-to-date lists and bibliographical references concerning such national standards may be obtained on application to the CEN-CENELEC Management Centre or to any CEN member.

iTeh STANDARD PREVIEW
(standards.iteh.ai)

This European Standard exists in three official versions (English, French, German). A version in any other language made by translation under the responsibility of a CEN member into its own language and notified to the CEN-CENELEC Management Centre has the same status as the official versions.

SIST EN 12830:2018
https://standards.iteh.ai/catalog/standards/sist/ec4352e6-b2e5-473d-bd6e-7b1e85e1e5fc/sist-en-12830-2018

CEN members are the national standards bodies of Austria, Belgium, Bulgaria, Croatia, Cyprus, Czech Republic, Denmark, Estonia, Finland, Former Yugoslav Republic of Macedonia, France, Germany, Greece, Hungary, Iceland, Ireland, Italy, Latvia, Lithuania, Luxembourg, Malta, Netherlands, Norway, Poland, Portugal, Romania, Serbia, Slovakia, Slovenia, Spain, Sweden, Switzerland, Turkey and United Kingdom.

EUROPEAN COMMITTEE FOR STANDARDIZATION
COMITÉ EUROPÉEN DE NORMALISATION
EUROPÄISCHES KOMITEE FÜR NORMUNG

CEN-CENELEC Management Centre: Rue de la Science 23, B-1040 Brussels

© 2018 CEN All rights of exploitation in any form and by any means reserved worldwide for CEN national Members.

Ref. No. EN 12830:2018 E

SIST EN 12830:2018

Contents

Page

European foreword ... 5
1 Scope ... 6
2 Normative references ... 6
3 Terms and definitions ... 7
4 Concepts ... 11
4.1 General ... 11
4.2 Temperature recorder elements ... 12
4.3 Temperature recorder architecture (or configuration) ... 12
4.3.1 General ... 12
4.3.2 Monolithic instrument ... 13
4.3.3 Monolithic instrument with external relevant data ... 13
4.3.4 Temperature recorder with digital probes ... 14
4.3.5 Temperature recorder on the cloud ... 15
5 Requirements ... 16
5.1 General ... 16
5.2 Measuring range ... 17
5.3 Protection of the data from manipulation ... 17
5.3.1 General ... 17
5.3.2 Audit trail ... 17
5.3.3 Clearly readable data copies ... 17
5.3.4 Safekeeping of accessibility of the data ... 17
5.3.5 Safekeeping of readability of the data ... 18
5.3.6 Safekeeping of correctness of the data ... 18
5.3.7 Access restrictions ... 18
5.3.8 Detailed documentation of the software ... 18
5.4 Locking of settings ... 18
5.5 Recording ... 18
5.5.1 General ... 18
5.5.2 Traceability ... 18
5.5.3 Chart only for mechanical recorder ... 19
5.6 Autonomous power supply ... 19
5.7 Degree of protection provided by the enclosure ... 19
5.8 Electrical safety (if applicable) ... 19
5.9 Operating characteristics linked to external electrical influences ... 20
5.9.1 External supply voltage (if applicable) ... 20
5.9.2 Autonomous supply (if applicable) ... 20
5.9.3 Frequency (AC) (if applicable) ... 20
5.9.4 Power cut-offs ... 20
5.9.5 Electrical power disturbances and susceptibility to radiated electromagnetic field ... 20
5.10 Metrological characteristics and usage profiles ... 20
5.10.1 General ... 20
5.10.2 Metrological characteristics ... 20
5.10.3 Usage profiles ... 22
5.11 Data security ... 22

iTeh STANDARD PREVIEW
(standards.iteh.ai)
SIST EN 12830:2018
https://standards.iteh.ai/catalog/standards/sist/cc4252c6-b3e5-4731-bd6a-e7d1485e45f3/sist-en-12830-2018

SIST EN 12830:2018

5.12 Software verification levels 22

6 Test methods 23
6.1 Test list 23
6.2 General conditions for tests 24
6.2.1 Pre-tests adjustments 24
6.2.2 Normal atmospheric conditions 24
6.2.3 Reference conditions 24
6.3 Determination of temperature measurement error 25
6.3.1 Test method 25
6.3.2 Reading the recording 25
6.3.3 Expression of results 25
6.4 Determination of response time 26
6.5 Determination of time recording error 26
6.6 Action of influence quantities 27
6.6.1 General 27
6.6.2 Variation in voltage supply (if applicable) 27
6.6.3 Influence of ambient temperature 27
6.6.4 Temperature testing under storage and transport conditions for the recorder 28
6.6.5 Shock resistance test (if applicable) 28
6.6.6 Mechanical vibrations (if applicable) 28
6.6.7 Degrees of protection provided by enclosures (IP Code) 29
6.6.8 Electrical safety (if applicable) 29
6.6.9 Dielectric strength (if applicable) 29
6.7 Software test 29
6.7.1 Test objective 29
6.7.2 Test procedure 29

7 Conditions of acceptance 33
7.1 Requirements 33
7.2 Operating error limits 33

8 Marking 34

9 Initial and periodic verification 34

Annex A (normative) Software testing 35

A.1 Software test general part – Test objective 35

A.2 Test procedure 35

A.2.1 General 35

A.2.2 Determine the temperature recorder subunits 35

A.2.3 Determine the relevant software of each unit or subunit 35

A.2.4 Define the applicable test blocks of each unit or subunit 35

A.2.5 Determine the type of each unit or subunit 36

A.3 Software test for type P1 and type P2 37

A.3.1 General 37

A.3.2 Block G: Basic requirements 37

A.3.3 Block L: Specific software requirements for long-term storage 48

A.3.4 Block T: Transmission of measurement data via Communication Networks 55

iTeh STANDARD PREVIEW
(standards.iteh.ai)
SIST EN 12830:2018
https://standards.iteh.ai/catalog/standards/sist/cc4252c6-b3e5-4731-bd6a-c7c1185e45f3/sist-en-12830-2018

SIST EN 12830:2018

A.3.5 Block S: Software separation 61
A.3.6 Block D: Download of relevant software 64
A.4 Software test for type P3 69
Annex B (informative) Manufacturer software test form 70
B.1 Identification 70
B.1.1 Manufacturer identification 70
B.1.2 Test object 70
B.1.3 Documents list 70
B.1.4 Define the applicable test blocks of each unit or subunit (L, T, S and D) 71
B.1.5 Selection of the type of each unit or subunit 71
B.2 Test requirement for type P1 and P2 73
B.2.1 General 73
B.2.2 Basic requirements 73
B.2.3 Extension L: Specific software requirements for long term storage 80
B.2.4 Extension T: Specific software requirements for data transmission 84
B.2.5 Extension S: Specific software requirements for software separation 87
B.2.6 Extension D: Specific software requirements 89
B.3 Test requirement for type P3 93
Annex C (informative) Example of data form describing suitability for use of equipment of a specific series (to be filled in by the manufacturer) 94
Annex D (informative) Expected operation time and storage capacity 95
D.1 Storage capacity dependent on the measurement interval 95
D.2 Battery lifetime dependent on usage 95
Annex E (informative) Required access to recorded data or functions is given in Table E.1 96

iTeh STANDARD PREVIEW
(standards.iteh.ai)
SIST EN 12830:2018
https://standards.iteh.ai/catalog/standards/sist/e0425266-b3e5-4731-bd6a-e7c1185e45f3/sist-en-12830-2018

SIST EN 12830:2018

European foreword

This document (EN 12830:2018) has been prepared by Technical Committee CEN/TC 423 “Means of measuring and/or recording temperature in the cold chain”, the secretariat of which is held by DIN.

This European Standard shall be given the status of a national standard, either by publication of an identical text or by endorsement, at the latest by February 2019 and conflicting national standards shall be withdrawn at the latest by February 2019.

Attention is drawn to the possibility that some of the elements of this document may be the subject of patent rights. CEN shall not be held responsible for identifying any or all such patent rights.

This document supersedes EN 12830:1999.

The standard has been completely revised and updated to the state of the art as follows:

— Scope was enlarged, i.e. location of sensors of the recorder with respect to types of usage are included now;

— Update of Clause 2 "Normative references";

— Update of Clause 3 "Terms and definitions";

iTeh STANDARD PREVIEW
(standards.iteh.ai)

— Clause 4 "Concepts" was added;

— Clause 5 "Requirements" was enlarged, i.e. subclause 5.3 "Protection of the data from manipulation" and 5.12 "Software verification levels" were added and furthermore Clause 5 has been updated, e.g. values for maximum relative timing error and response time ;

SIST EN 12830:2018
https://standards.iteh.ai/catalog/standards/sist/cc4252c6-b3e5-4731-bd6a-c7e1185e4513/sist-en-12830-2018

— New subclause 6.7 "Software test" and the related Annex A "Software testing" and Annex B "Manufacturer software test form" were added;

— New Annex D "Expected operation time and storage capacity" and Annex E "Required access to recorded data or functions" were added.

This European Standard is a document meeting the objectives of Directives:

— 92/1/EEC of January 13, 1992 of the Commission on the monitoring of temperatures in the means of transport, warehousing and storage of quick-frozen foodstuffs intended for human consumption;

— 93/43/EEC of June 14, 1993 of the Council of the hygiene of foodstuffs and in particular on “temperature control criteria”.

According to the CEN-CENELEC Internal Regulations, the national standards organizations of the following countries are bound to implement this European Standard: Austria, Belgium, Bulgaria, Croatia, Cyprus, Czech Republic, Denmark, Estonia, Finland, Former Yugoslav Republic of Macedonia, France, Germany, Greece, Hungary, Iceland, Ireland, Italy, Latvia, Lithuania, Luxembourg, Malta, Netherlands, Norway, Poland, Portugal, Romania, Serbia, Slovakia, Slovenia, Spain, Sweden, Switzerland, Turkey and the United Kingdom.

SIST EN 12830:2018

1 Scope

This document specifies the technical and functional characteristics of temperature recorders for the transport, storage and distribution of temperature sensitive goods between −80 °C and +85 °C.

It specifies the test methods which allow the determination of the equipment's conformity, suitability and performance requirements.

It applies to the whole temperature recording system. The temperature sensor(s) may be integrated into the recorder or be remote from it [external sensor(s)].

It gives some requirements with regards to the location of sensors of the recorder with respect to types of usage such as transport, storage and distribution.

NOTE Examples for the transport, storage and distribution of temperature sensitive goods between −80 °C and +85 °C are chilled, frozen and deep frozen, quick frozen food, ice cream, fresh and hot food, pharmaceuticals, blood, organs, chemicals, biologicals, electronic and mechanical devices, flowers, plants, bulbs, raw materials and liquids, animals, art and furnishing.

2 Normative references

The following documents are referred to in the text in such a way that some or all of their content constitutes requirements of this document. For dated references, only the edition cited applies. For undated references, the latest edition of the referenced document (including any amendments) applies.

EN 13486, *Temperature recorders and thermometers for the transport, storage and distribution of chilled, frozen, deep-frozen/quick-frozen food and ice cream - Periodic verification*

iTeh STANDARD PREVIEW
(standards.iteh.ai)

EN 60529, *Degrees of protection provided by enclosures (IP Code) (IEC 60529)*

EN 61000-6-2, *Electromagnetic compatibility (EMC) - Part 6-2: Generic standards - Immunity for industrial environments (IEC 61000-6-2)*

SIST EN 12830:2018
https://standards.iteh.ai/catalog/standards/sist/cc4252c6-b3e5-4731-bd6a-c7c1185e45f3/sist-en-12830-2018

EN 61000-6-3, *Electromagnetic compatibility (EMC) - Part 6-3: Generic standards - Emission standard for residential, commercial and light-industrial environments (IEC 61000-6-3)*

EN 61010-1, *Safety requirements for electrical equipment for measurement, control and laboratory use - Part 1: General requirements (IEC 61010-1)*

ISO/IEC 17025, *General requirements for the competence of testing and calibration laboratories*

ISO/IEC 27001, *Information technology - Security techniques - Information security management systems - Requirements*

SIST EN 12830:2018

3 Terms and definitions

For the purposes of this document, the following terms and definitions apply.

ISO and IEC maintain terminological databases for use in standardization at the following addresses:

- IEC Electropedia: available at http://www.electropedia.org/
- ISO Online browsing platform: available at http://www.iso.org/obp

3.1
quantity
property of a phenomenon, body, or substance, where the property has a magnitude that can be expressed as a number and a reference

3.2
unit of measurement
particular quantity, defined and adopted by convention, with which other quantities of the same kind are compared in order to express their magnitudes relative to that quantity

EXAMPLE The unit of temperature used in this standard is “degree Celsius”.

3.3
value of a quantity
number and reference together expressing magnitude of a quantity

iTeh STANDARD PREVIEW
(standards.iteh.ai)

EXAMPLE 15 °C.

3.4
measurement
set of operations having the object of determining a value of a quantity

SIST EN 12830:2018
https://standards.iteh.ai/catalog/standards/sist/ea4e2f2a-6d1d-4731-bd6a-c7c1185e45f3/sist-en-12830-2018

3.5
measurand
particular quantity subject to a measurement

EXAMPLE Temperature.

3.6
influence quantity
quantity that, in a direct measurement, does not affect the quantity that is actually measured, but affects the relation between the indication and the measurement result

3.7
indication (of a measuring instrument)
value of a quantity provided by a measuring instrument

3.8
accuracy class
class of measuring instruments of measuring systems that meet stated metrological requirements that are intended to keep measurement errors or instrumental measurement uncertainties within specified limits under specified operating conditions

SIST EN 12830:2018

3.9
maximum permissible measurement error
maximum permissible error
extreme value of **measurement error**, with respect to a known **reference quantity value**, permitted by specifications or regulations for a given **measurement**, **measuring instrument**, or **measuring system**

3.10
measurement uncertainty
non-negative parameter characterizing the dispersion of the quantity values being attributed to a measurand, based on the information used

3.11
error of measurement
measured quantity value minus a reference quantity value

3.12
measuring instrument
device intended to be used to make measurements, alone or in conjunction with supplementary device(s)

3.13
displaying device
indicating device
part of a measuring instrument that displays an indication

iTeh STANDARD PREVIEW
(standards.iteh.ai)

3.14
recording device
part of a measuring instrument that provides a record of an indication

SIST EN 12830:2018
https://standards.iteh.ai/catalog/standards/sist/ca1252a6-b3e5-4731-bd6a-c7c1185e45f3/sist-en-12830-2018

3.15
temperature sensor
element of a measuring instrument or measuring chain that is directly affected by the temperature

3.16
scale
scale of a measuring instrument
ordered set of marks, together with any numbering, forming part of a displaying device of a measuring instrument

3.17
adjustment
adjustment of a measuring instrument
operation of bringing a measuring instrument into a state of performance suitable for its use

3.18
span
modulus of the difference between the two limits of a nominal range

EXAMPLE For a nominal range of - 35 °C to + 25 °C, the span is 60 K.

SIST EN 12830:2018

3.19
measuring range
working range
set of values for which the error of a measuring instrument is intended to lie within specified limits

3.20
rated operating conditions
operating condition that has to be fulfilled during **measurement** in order that a **measuring instrument** or **measuring system** perform as designed

3.21
limiting conditions
extreme conditions that a measuring instrument is required to withstand without damage, and without degradation of specified metrological characteristics when it is subsequently operated under its rated operating conditions

3.22
reference conditions
operating condition prescribed for evaluating the performance of a measuring instrument or measuring system or for comparison of measurement results

3.23
resolution (of a displaying device)
smallest difference between indications of a displaying device that can be meaningfully distinguished

iTeh STANDARD PREVIEW
(standards.iteh.ai)

3.24
response time
time needed for the recorded value to reach and remain with specified limits around actual temperature to which it is measuring

SIST EN 12830:2018
https://standards.iteh.ai/catalog/standards/sist/cc4252c6-b3e5-4731-bd6a-c7c1185e45f3/sist-en-12830-2018

3.25
storage and transport conditions
extreme conditions which a non-operational measuring instrument can withstand without damage and without degradation of specified metrological characteristics when it is subsequently operated under its rated operating conditions

3.26
chilled application
application which has been subjected to cooling (without freezing) and is intended to be maintained at low temperature

3.27
frozen food
food which has been subjected to a freezing process specially designed to preserve the wholesomeness and quality of the product

3.28
deep-frozen or quick-frozen food
food which has been subjected to a quick freezing process

3.29
recording interval
time interval that has elapsed between two successively stored measurements

SIST EN 12830:2018

3.30
recording duration
time interval between the beginning and the end of the recording

3.31
chart
tape, disk, form or other structure upon which is recorded the measurand

3.32
duration of transport
time interval between loading and unloading

3.33
subunit
distinct part or component of the temperature recorder that generates, encodes, transports, prints, indicates and/or stores relevant data

Note 1 to entry: It is housed in its own enclosure.

3.34
audit trail
chronological record that reconstructs and examines the sequence of activities surrounding or leading to a specific operation, procedure, or event in a security relevant transaction from inception to final result

iTeh STANDARD PREVIEW
(standards.iteh.ai)

Note 1 to entry: See National Information Assurance (IA) Glossary. Committee on National Security Systems. 7 August 1996. p. 4). It documents who did what and when.

SIST EN 12830:2018
https://standards.iteh.ai/catalog/standards/sist/cc4252c6-b3e5-4731-bd6a-c7c1185e45f3/sist-en-12830-2018

3.35
service provider
organization or business which offers service to others in exchange for payment

3.36
relevant measurement data
set of temperature—time—location tuples recorded during the traceability time span

Note 1 to entry: Once data age exceeds this time span it loses its “relevant” status.

3.37
relevant parameters
parameters that affect relevant measurement data

EXAMPLE Calibration parameters, time-date settings and installation location (such as truck ID or warehouse room ID).

3.38
relevant software
software that produces, stores, process or transmits relevant data

Note 1 to entry: Relevant software can cohabit with non-relevant software.

3.39
command
any physical or logical system that enables the access to a function

SIST EN 12830:2018

3.40
relevant command
command that impacts on relevant parameters and relevant measurement data

3.41
cloud
cloud computing, also known as remote on-demand computing; it is a kind of internet-based computing, where shared resources and information are provided to computers and other devices on-demand

3.42
solution as a service (SaaS)
solution where the monitoring system hardware (sensors, recorders and base stations) is installed at the organization site, but the software, server and database are hosted by a service provider; the data are collected, stored and managed by the service provider whilst the organization owner of the recorders has access to the data through a secure web interface

Note 1 to entry: In this scenario, the service provider ensures the cloud system maintenance, correct performance and qualification.

3.43
measuring system
set of one or more measuring instruments and often other devices, including any reagent and supply, assembled and adapted to give information used to generate measured quantity values within specified intervals for quantities of specified kinds

iTeh STANDARD PREVIEW
(standards.iteh.ai)

Note 1 to entry: A measuring system can consist of one measuring instrument.

4 Concepts

SIST EN 12830:2018
https://standards.iteh.ai/catalog/standards/sist/cc4252c6-b3e5-4731-bd6a-c7c1185e45f3/sist-en-12830-2018

4.1 General

The objective of the temperature recorder is to generate and to record at least the accurate temperature and time, and the accurate location if applicable.

An additional concept is the time span that the recorded data has to be traceable (for example, minimum one year for deep frozen food.)

The recorder can be a fully mechanical recorder, a mechanical and electronic recorder or a fully electronic recorder. This is why “relevant software” is not always present. Relevant measurement data can be exported for its exploitation by other systems, for example a fleet or warehouse management system. If the exporting mechanism cannot guarantee the traceability of the data, the exported data loses its “relevant” status.

The instrument will normally include a set of parameters that affect relevant characteristics of the temperature recorder. For example, calibration parameters, time-date settings and installation location (such as truck ID or warehouse room ID). We will call these parameters “relevant parameters”.

The combination of the relevant measurement data plus the relevant parameters forms the “relevant data”.

The software that produces, stores, process or transmits relevant data are called reporting software. Relevant software can cohabit with non-relevant software.

SIST EN 12830:2018

4.2 Temperature recorder elements

Figure 1 shows the main elements of a temperature recorder.

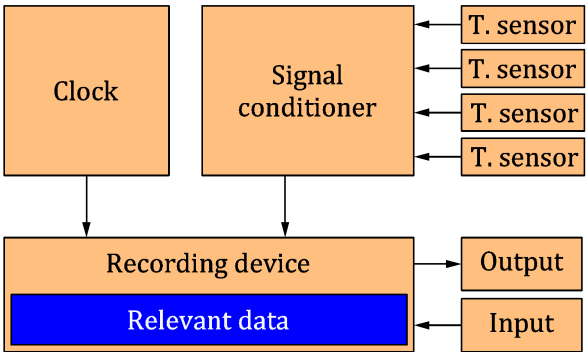

Figure 1 — Abstract view of the temperature recorder showing its main elements

Temperature sensor type can be PT100, PT1000, NTC, Thermocouple, etc. Sensor can be internal, when they are located within the unit enclosure, or external, when not. External sensors can be changeable or fixed to the unit. Sensor intended to measure the temperature of air or the core temperature of the product (insertion sensor).

External sensors can be packaged as digital probes when they include electronics to convert the temperature to a numeric value and to communicate with the recorder through a digital channel.

iTeh STANDARD PREVIEW
(standards.iteh.ai)

Power supply can be external or internal. Internal supply types can be rechargeable and non-rechargeable.

An output mechanism will provide output data. Common alternatives are display, printer, and communication port. Communication port can be wire connected or wireless, and can follow an approved standard or be of proprietary design.

SIST EN 12830:2018
https://standards.iteh.ai/catalog/standards/sist/aeaf133e-0cb2-45a7-b1d6-e7d1185e45f3/sist-en-12830-2018

An input mechanism is used to give commands to the temperature recorder. Common alternatives are keyboard, touchscreen and communication port.

The clock for electronic recorder is commonly based on a crystal oscillator that produces a very precise frequency. In order to maintain the correct time on power off, a backup power source is required to keep the clock running.

Temperature recorder memory can be volatile or non-volatile. The non-volatile memory can be erasable or permanent. When the temperature recorder program is stored in permanent memory the unit is non-reprogrammable. When the measurements are stored in volatile memory a backup power source is required to ensure that relevant data are not lost on power off.

4.3 Temperature recorder architecture (or configuration)

4.3.1 General

The temperature recorder can be built in a variety of architectures ranging from a monolithic instrument to a very complex distributed system. All the subunits of a distributed system that generates, encodes, transports, or stores relevant data will form part of the temperature recorder.

In order to clarify the boundaries of the temperature recorders, a description of the possible alternatives and major design challenges will be given in 4.3.2 to 4.3.5.

SIST EN 12830:2018

4.3.2 Monolithic instrument

A monolithic temperature recorder includes all of its components in a single package, excluding the temperature sensors that can be internal or external, as shown in Figure 2.

It has to be noted that in this solution all the relevant data are always maintained within the temperature recorder. This data could be exported to other devices but is nevertheless kept in the temperature recorder during the full duration of the traceability time span. Exported data loses its relevant status since traceability is not guaranteed.

Main challenges are:

— Instrument design to achieve the proposed accuracy within the measurement range and operational range.

— Memory design to allow for the storage of all the relevant data during the complete traceability span.

— Unit enclosure and sealing design to prevent electronic, memory and sensor tampering.

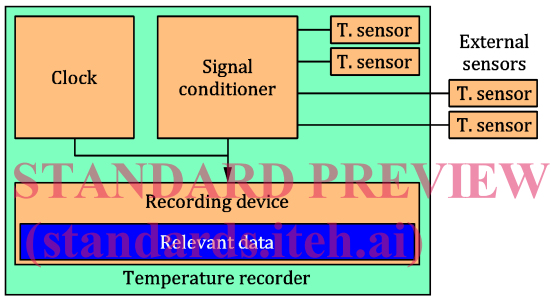

iTeh STANDARD PREVIEW
(standards.iteh.ai)
SIST EN 12830:2018
https://standards.iteh.ai/catalog/standards/sist/...-c7c1185e45f3/sist-en-12830-2018

Figure 2 — Monolithic temperature recorder

4.3.3 Monolithic instrument with external relevant data

As shown in Figure 3, in this alternative the relevant data can be kept in an external medium. Relevant data are exported to an external device and can be erased from the temperature recorder. In many cases the external device will be a computer that will store in its disk the exported relevant data.

The exported relevant data are packaged in such a way as to prevent and/or detect its manipulation.

The packaging could be performed internally by the instrument or externally by a computer. In the first case, the downloading to the external storage can be done by an off the shelf application. In the second case, the data leaves the instrument in clear (that is without packaging) and is externally packaged. Therefore, the downloading and packaging application is instrumental to the traceability of the data, and is considered a subunit of the temperature recorder.

The connection between the instrument and the external storage can be by wired or wireless.

Note that the user of the temperature recorder has the responsibility of maintaining the exported relevant data, for example, implementing a sound backup policy.