SLOVENSKI STANDARD
SIST EN 1114-3:2020

01-januar-2020

Nadomešča:

SIST EN 1114-3:2001+A1:2008

Stroji za predelavo gume in plastike - Ekstruderji in oprema za iztiskavanje - 3. del: Varnostne zahteve za stroje za izvlačenje

Plastics and rubber machines - Extruders and extrusion lines - Part 3: Safety requirements for haul-offs

Kunststoff- und Gummimaschinen - Extruder und Extrusionsanlagen - Teil 3: Sicherheitsanforderungen für Abzüge

Machines pour les matières plastiques et le caoutchouc - Extrudeuses et lignes d'extrusion - Partie 3 : Prescriptions de sécurité pour les extracteurs

Ta slovenski standard je istoveten z: EN 1114-3:2019

ICS:

83.200	Oprema za gumarsko industrijo in industrijo polimernih materialov	Equipment for the rubber and plastics industries

SIST EN 1114-3:2020 **en**

EUROPEAN STANDARD

NORME EUROPÉENNE

EUROPÄISCHE NORM

EN 1114-3

September 2019

ICS 83.200

Supersedes EN 1114-3:2001+A1:2008

English Version

Plastics and rubber machines - Extruders and extrusion lines - Part 3: Safety requirements for haul-offs

Machines pour les matières plastiques et le caoutchouc - Extrudeuses et lignes d'extrusion - Partie 3 : Prescriptions de sécurité pour les extracteurs

Kunststoff- und Gummimaschinen - Extruder und Extrusionsanlagen - Teil 3: Sicherheitsanforderungen für Abzüge

This European Standard was approved by CEN on 28 July 2019.

CEN members are bound to comply with the CEN/CENELEC Internal Regulations which stipulate the conditions for giving this European Standard the status of a national standard without any alteration. Up-to-date lists and bibliographical references concerning such national standards may be obtained on application to the CEN-CENELEC Management Centre or to any CEN member.

This European Standard exists in three official versions (English, French, German). A version in any other language made by translation under the responsibility of a CEN member into its own language and notified to the CEN-CENELEC Management Centre has the same status as the official versions.

CEN members are the national standards bodies of Austria, Belgium, Bulgaria, Croatia, Cyprus, Czech Republic, Denmark, Estonia, Finland, France, Germany, Greece, Hungary, Iceland, Ireland, Italy, Latvia, Lithuania, Luxembourg, Malta, Netherlands, Norway, Poland, Portugal, Republic of North Macedonia, Romania, Serbia, Slovakia, Slovenia, Spain, Sweden, Switzerland, Turkey and United Kingdom.

EUROPEAN COMMITTEE FOR STANDARDIZATION
COMITÉ EUROPÉEN DE NORMALISATION
EUROPÄISCHES KOMITEE FÜR NORMUNG

CEN-CENELEC Management Centre: Rue de la Science 23, B-1040 Brussels

Ref. No. EN 1114-3:2019 E

Contents

Page

European foreword

This document (EN 1114-3:2019) has been prepared by Technical Committee CEN/TC 145 “Plastics and rubber machines”, the secretariat of which is held by UNI.

This European Standard shall be given the status of a national standard, either by publication of an identical text or by endorsement, at the latest by March 2020 and conflicting national standards shall be withdrawn at the latest by March 2020.

Attention is drawn to the possibility that some of the elements of this document may be the subject of patent rights. CEN shall not be held responsible for identifying any or all such patent rights.

This document supersedes EN 1114-3:2001+A1:2008.

Compared with the previous version EN 1114-3:2001+A1:2008, the following significant technical changes have been made:

— the performance levels of safety related parts of control systems have been specified in accordance with EN ISO 13849-1:2015;

— the annex for noise measurement has been revised;

— the revision of type-A and type-B standards have been considered;

— the list of significant hazards has been moved to an informative annex;

— the safety requirements and protective measures have been modified by taking into consideration the technological progress in the plastics and rubber industry and the continuous development of the safety technology.

This document has been prepared under a mandate given to CEN by the European Commission and the European Free Trade Association, and supports essential requirements of EU Directive(s).

For relationship with EU Directive(s), see informative Annex ZA, which is an integral part of this document.

EN 1114, *Plastics and rubber machines — Extruders and extrusion lines*, currently comprises the following parts:

— *Part 1: Safety requirements for extruders*;

— *Part 3: Safety requirements for haul-offs*.

According to the CEN-CENELEC Internal Regulations, the national standards organisations of the following countries are bound to implement this European Standard: Austria, Belgium, Bulgaria, Croatia, Cyprus, Czech Republic, Denmark, Estonia, Finland, France, Germany, Greece, Hungary, Iceland, Ireland, Italy, Latvia, Lithuania, Luxembourg, Malta, Netherlands, Norway, Poland, Portugal, Republic of North Macedonia, Romania, Serbia, Slovakia, Slovenia, Spain, Sweden, Switzerland, Turkey and the United Kingdom.

Introduction

This document is a type-C standard as stated in EN ISO 12100:2010.

This document is of relevance, in particular, for the following stakeholder groups representing the market players with regard to machinery safety:

— machine manufacturers (small, medium and large enterprises);

— health and safety bodies (regulators, accident prevention organizations, market surveillance, etc.).

Others can be affected by the level of machinery safety achieved with the means of the document by the above-mentioned stakeholder groups:

— machine users/employers (small, medium and large enterprises);

— machine users/employees (e.g. trade unions, organizations for people with special needs);

— service providers, e.g. for maintenance (small, medium and large enterprises);

— consumers (in case of machinery intended for use by consumers).

The above-mentioned stakeholder groups have been given the possibility to participate at the drafting process of this document.

The machinery concerned and the extent to which hazards, hazardous situations or hazardous events are covered are indicated in the Scope of this document.

When requirements of this type-C standard are different from those which are stated in type-A or type-B standards, the requirements of this type-C standard take precedence over the requirements of the other standards for machines that have been designed and built according to the requirements of this type-C standard.

1 Scope

This document deals with all significant hazards, hazardous situations and events relevant to haul-offs for cable, cable core, profiles and pipes for processing plastic and rubber, when they are used as intended and under conditions of misuse which are reasonably foreseeable by the manufacturer (see Annex A). The hazards have been identified taking into account all phases of the machine life cycle according to EN ISO 12100:2010, 5.4.

The following kinds of haul-offs are covered:

— caterpillar haul-offs;

— belt haul-offs;

— capstan haul-offs;

— belt capstan haul-offs;

— roller haul-offs.

The haul-off can function independently and begins at the product inlet opening and ends at the product outlet.

Cutting units which are integrated with or attached to the haul-off are not covered.

Take-off devices used on film or sheet lines are not covered.

This document is not applicable to haul-offs that are manufactured before the date of its publication.

2 Normative references

The following documents are referred to in the text in such a way that some or all of their content constitutes requirements of this document. For dated references, only the edition cited applies. For undated references, the latest edition of the referenced document (including any amendments) applies.

EN 349:1993+A1:2008, *Safety of machinery - Minimum gaps to avoid crushing of parts of the human body*

EN 60204-1:2006, *Safety of machinery - Electrical equipment of machines - Part 1: General requirements (IEC 60204-1:2005)*[1)]

EN 60529:1991, *Degrees of protection provided by enclosures (IP Code) (IEC 60529:1989)*[2)]

EN 61000-6-2:2019, *Electromagnetic compatibility (EMC) - Part 6-2: Generic standards - Immunity for industrial environments (IEC 61000-6-2:2016)*

EN 61000-6-4:2019, *Electromagnetic compatibility (EMC) - Part 6-4: Generic standards - Emission standard for industrial environments (IEC 61000-6-4:2018)*

EN 61496-1:2013, *Safety of machinery - Electro-sensitive protective equipment - Part 1: General requirements and tests (IEC 61496-1:2012)*

EN 61496-2:2013, *Safety of machinery - Electro-sensitive protective equipment - Part 2: Particular requirements for equipment using active opto-electronic protective devices (AOPDs) (IEC 61496-2:2013)*

---

1) This document is currently impacted by the amendment EN 60204-1:2006/A1:2009.

2) This document is currently impacted by the amendments EN 60529:1991/A1:2000 and EN 60529:1991/A2:2013.

EN ISO 3744:2010, *Acoustics - Determination of sound power levels and sound energy levels of noise sources using sound pressure - Engineering methods for an essentially free field over a reflecting plane (ISO 3744:2010)*

EN ISO 3746:2010, *Acoustics - Determination of sound power levels and sound energy levels of noise sources using sound pressure - Survey method using an enveloping measurement surface over a reflecting plane (ISO 3746:2010)*

EN ISO 4413:2010, *Hydraulic fluid power - General rules and safety requirements for systems and their components (ISO 4413:2010)*

EN ISO 4414:2010, *Pneumatic fluid power - General rules and safety requirements for systems and their components (ISO 4414:2010)*

EN ISO 4871:2009, *Acoustics - Declaration and verification of noise emission values of machinery and equipment (ISO 4871:1996)*

EN ISO 9614-2:1996, *Acoustics - Determination of sound power levels of noise sources using sound intensity - Part 2: Measurement by scanning (ISO 9614-2:1996)*

EN ISO 11201:2010, *Acoustics - Noise emitted by machinery and equipment - Determination of emission sound pressure levels at a work station and at other specified positions in an essentially free field over a reflecting plane with negligible environmental corrections (ISO 11201:2010)*

EN ISO 11202:2010, *Acoustics - Noise emitted by machinery and equipment - Determination of emission sound pressure levels at a work station and at other specified positions applying approximate environmental corrections (ISO 11202:2010)*

EN ISO 11204:2010, *Acoustics - Noise emitted by machinery and equipment - Determination of emission sound pressure levels at a work station and at other specified positions applying accurate environmental corrections (ISO 11204:2010)*

EN ISO 11688-1:2009, *Acoustics - Recommended practice for the design of low-noise machinery and equipment - Part 1: Planning (ISO/TR 11688-1:1995)*

EN ISO 12100:2010, *Safety of machinery - General principles for design - Risk assessment and risk reduction (ISO 12100:2010)*

EN ISO 13732-1:2008, *Ergonomics of the thermal environment - Methods for the assessment of human responses to contact with surfaces - Part 1: Hot surfaces (ISO 13732-1:2006)*

EN ISO 13849-1:2015, *Safety of machinery - Safety-related parts of control systems - Part 1: General principles for design (ISO 13849-1:2015)*

EN ISO 13850:2015, *Safety of machinery - Emergency stop function - Principles for design (ISO 13850:2015)*

EN ISO 13855:2010, *Safety of machinery - Positioning of safeguards with respect to the approach speeds of parts of the human body (ISO 13855:2010)*

EN ISO 13856-1:2013, *Safety of machinery - Pressure-sensitive protective devices - Part 1: General principles for design and testing of pressure-sensitive mats and pressure-sensitive floors (ISO 13856-1:2013)*

EN ISO 13857:2008, *Safety of machinery - Safety distances to prevent hazard zones being reached by upper and lower limbs (ISO 13857:2008)*

EN ISO 14119:2013, *Safety of machinery - Interlocking devices associated with guards - Principles for design and selection (ISO 14119:2013)*

EN ISO 14120:2015, *Safety of machinery - Guards - General requirements for the design and construction of fixed and movable guards (ISO 14120:2015)*

3 Terms and definitions

For the purposes of this document, the terms and definitions given in EN ISO 12100:2010 and the following apply.

ISO and IEC maintain terminological databases for use in standardization at the following addresses:

- IEC Electropedia: available at http://www.electropedia.org/
- ISO Online browsing platform: available at https://www.iso.org/obp

3.1
haul-off
powered machine used to continuously haul off products such as cable, cable core, profiles and pipes by pulling the product by means of friction between the product and the moving gripping elements

3.2
caterpillar haul-off
haul-off comprising two or more sets of linked elements equipped with gripping segments, whereby one or more are driven and the grip is achieved when the elements are closed together by pressing the product between them

Note 1 to entry: See Figure 1.

3.3
belt haul-off
haul-off comprising two or more sets of linked elements equipped with continuous gripping belts, whereby one or more are driven and the grip is achieved when the belts are closed together by pressing the product between them

Note 1 to entry: See Figure 2.

3.4
capstan haul-off
haul-off comprising one or more wheels, at least one of which is driven, whereby the grip is achieved by the tension of the product, wrapped one or more times around the wheel(s)

Note 1 to entry: See Figure 3.

3.5
belt capstan haul-off
haul-off comprising a wheel and a belt which covers at least partially the circumference of the wheel, whereby the wheel, the belt or both are driven and the grip is achieved by pressing the product between the belt and the wheel

Note 1 to entry: See Figure 4.

3.6
roller haul-off
haul-off comprising one or more sets of counter-rotating rolls set in line one above the other, whereby one roller or both of each set is driven and the grip is achieved by pressing the product between the rollers

Note 1 to entry: See Figure 5.

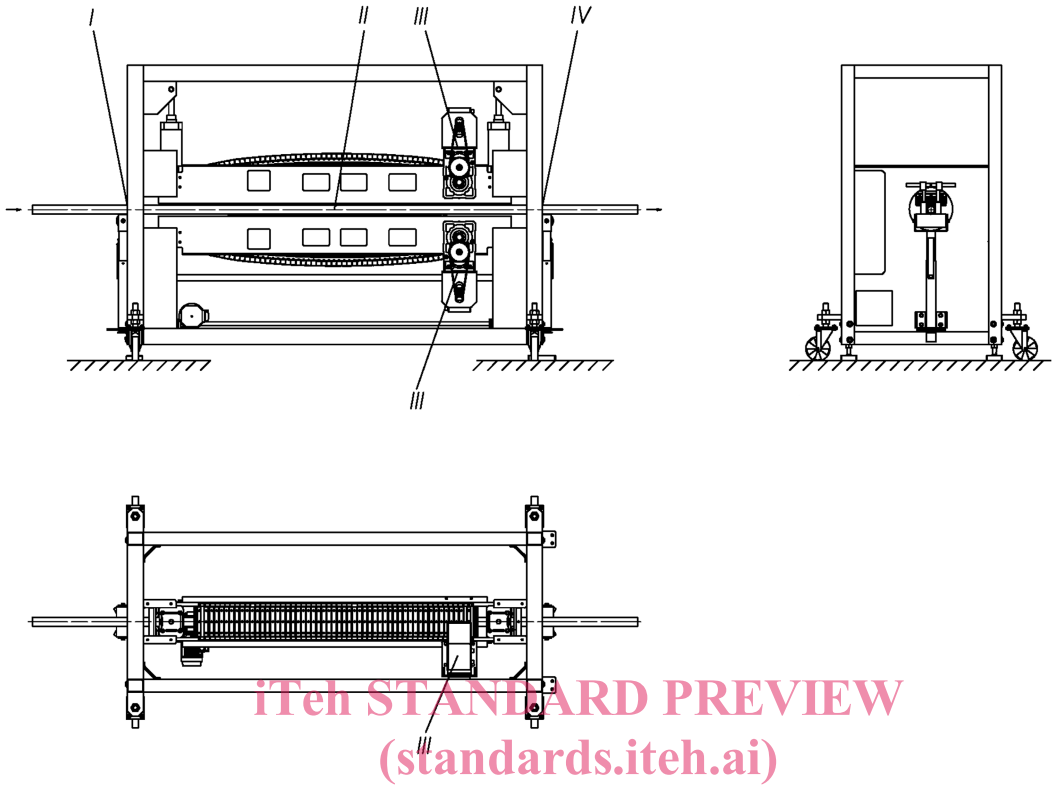

Key

I feeding zone

II conveying zone

III drive and power transmission zone

IV discharge zone

Protective devices are not shown

Figure 1 — Example of the danger zones on a caterpillar haul-off

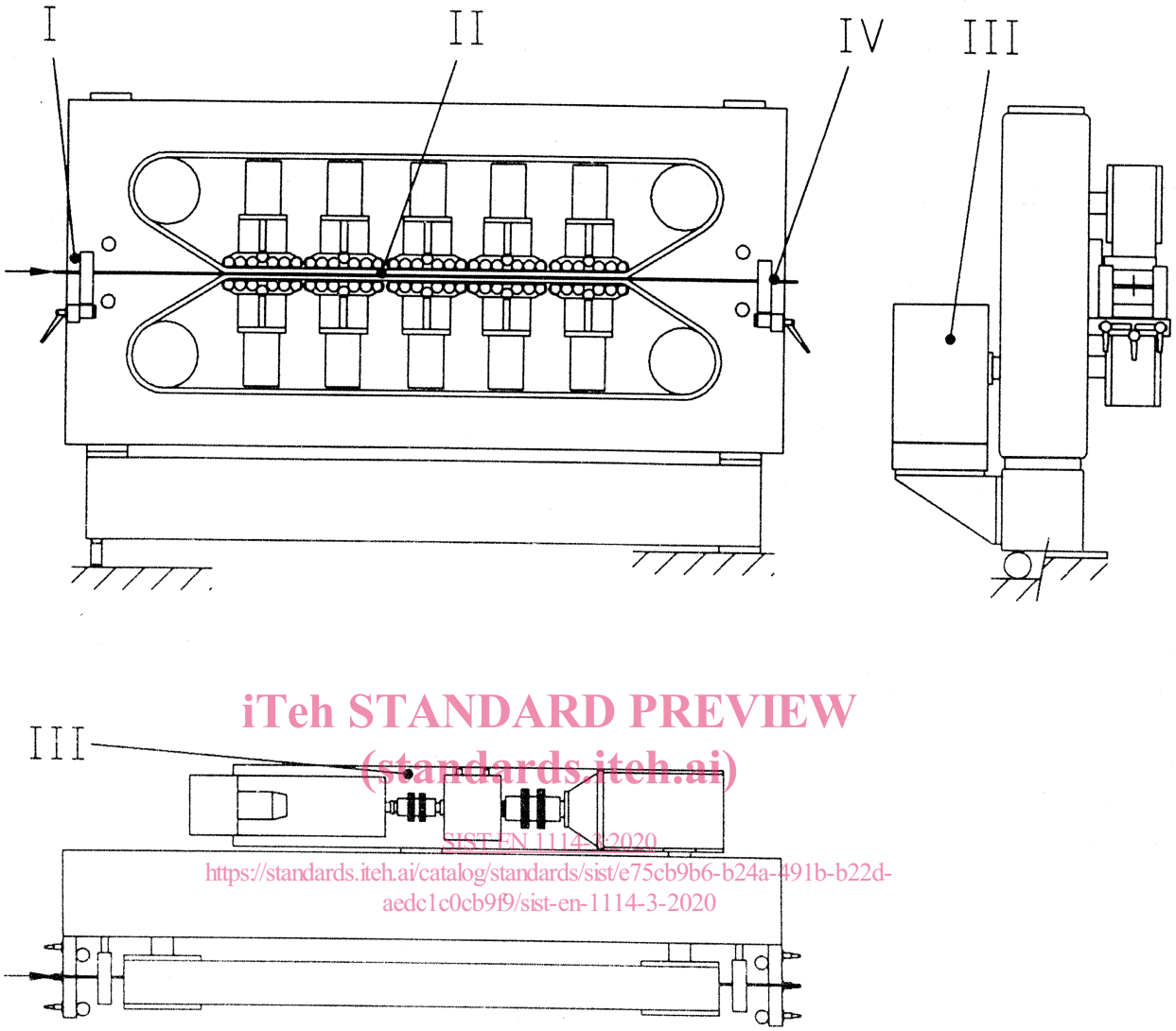

Key

I feeding zone

II conveying zone

III drive and power transmission zone

IV discharge zone

Protective devices are not shown.

Figure 2 — Example of the danger zones on a belt haul-off

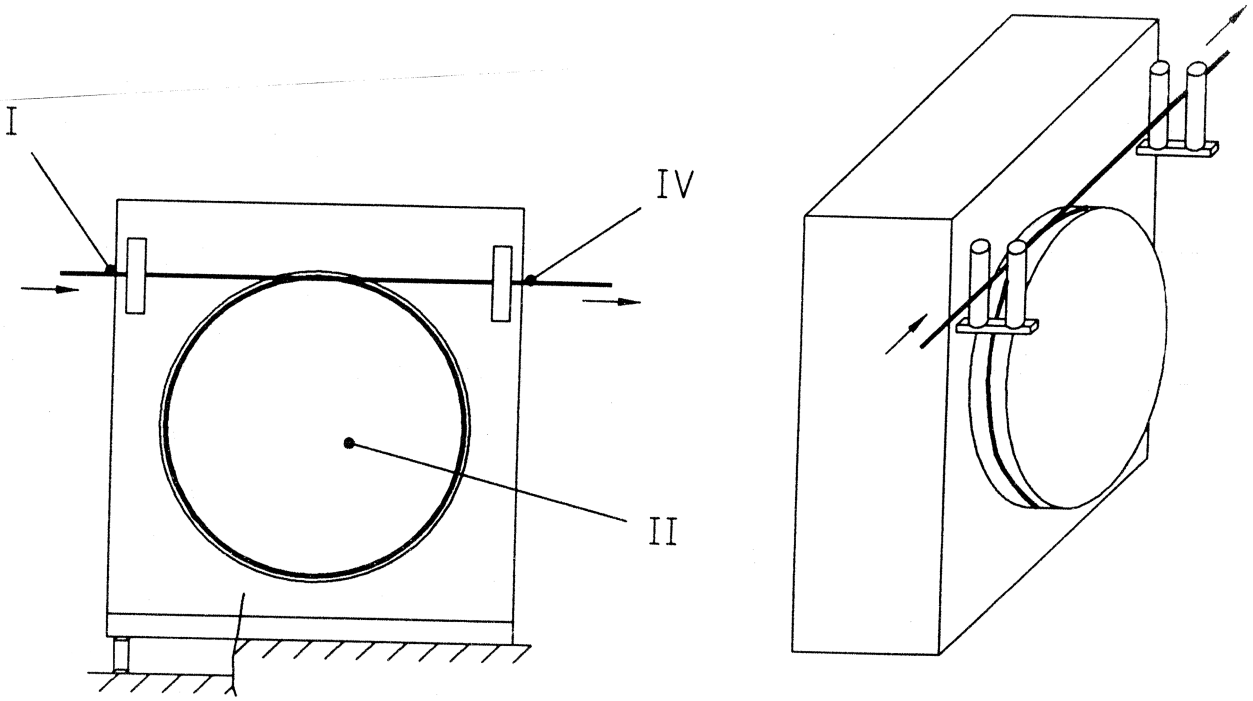

a) Front view