SLOVENSKI STANDARD
SIST EN 1873:2014/kFprA1:2015

01-oktober-2015

Predizdelani dodatki za ostrešja - Plastični svetlobniki - Specifikacija izdelka in preskusne metode

Prefabricated accessories for roofing - Individual rooflights of plastics - Product specification and test methods

Vorgefertigte Zubehörteile für Dachdeckungen - Lichtkuppeln aus Kunststoff - Produktspezifikation und Prüfverfahren

iTeh STANDARD PREVIEW
(standards.iteh.ai)

Accessoires préfabriqués pour couverture - Lanterneaux ponctuels en matière plastique - Spécifications des produits et méthodes d'essais

SIST EN 1873:2014/kFprA1:2015
https://standards.iteh.ai/catalog/standards/sist/47c32f68-5549-4042-8e5e-4290f825c0ca/sist-en-1873-2014-kfpra1-2015

Ta slovenski standard je istoveten z: EN 1873:2014/FprA1:2015

ICS:

91.060.20 Strehe Roofs

SIST EN 1873:2014/kFprA1:2015 en,fr,de

2003-01.Slovenski inštitut za standardizacijo. Razmnoževanje celote ali delov tega standarda ni dovoljeno.

SIST EN 1873:2014/kFprA1:2015

iTeh STANDARD PREVIEW
(standards.iteh.ai)

SIST EN 1873:2014/kFprA1:2015
https://standards.iteh.ai/catalog/standards/sist/47c32f68-5549-4042-8e5e-4290f825c0ca/sist-en-1873-2014-kfpra1-2015

SIST EN 1873:2014/kFprA1:2015

EUROPEAN STANDARD

NORME EUROPÉENNE

EUROPÄISCHE NORM

FINAL DRAFT EN 1873:2014

FprA1

August 2015

ICS 91.060.20

English Version

Prefabricated accessories for roofing - Individual rooflights of plastics - Product specification and test methods

Accessoires préfabriqués pour couverture - Lanterneaux ponctuels en matière plastique - Spécifications des produits et méthodes d'essais

Vorgefertigte Zubehörteile für Dachdeckungen - Lichtkuppeln aus Kunststoff - Produktspezifikation und Prüfverfahren

This draft amendment is submitted to CEN members for unique acceptance procedure. It has been drawn up by the Technical Committee CEN/TC 128.

This draft amendment A1, if approved, will modify the European Standard EN 1873:2014. If this draft becomes an amendment, CEN members are bound to comply with the CEN/CENELEC Internal Regulations which stipulate the conditions for inclusion of this amendment into the relevant national standard without any alteration.

iTeh STANDARD PREVIEW
(standards.iteh.ai)

This draft amendment was established by CEN in three official versions (English, French, German). A version in any other language made by translation under the responsibility of a CEN member into its own language and notified to the CEN-CENELEC Management Centre has the same status as the official versions.

CEN members are the national standards bodies of Austria, Belgium, Bulgaria, Croatia, Cyprus, Czech Republic, Denmark, Estonia, Finland, Former Yugoslav Republic of Macedonia, France, Germany, Greece, Hungary, Iceland, Ireland, Italy, Latvia, Lithuania, Luxembourg, Malta, Netherlands, Norway, Poland, Portugal, Romania, Slovakia, Slovenia, Spain, Sweden, Switzerland, Turkey and United Kingdom.

SIST EN 1873:2014/kFprA1:2015
https://standards.iteh.ai/catalog/standards/sist/7c5b1b28-5d4b-4012-8e5a-4290f825c0ca/sist-en-1873-2014-kfpra1-2015

Recipients of this draft are invited to submit, with their comments, notification of any relevant patent rights of which they are aware and to provide supporting documentation.

Warning : This document is not a European Standard. It is distributed for review and comments. It is subject to change without notice and shall not be referred to as a European Standard.

EUROPEAN COMMITTEE FOR STANDARDIZATION
COMITÉ EUROPÉEN DE NORMALISATION
EUROPÄISCHES KOMITEE FÜR NORMUNG

CEN-CENELEC Management Centre: Avenue Marnix 17, B-1000 Brussels

© 2015 CEN All rights of exploitation in any form and by any means reserved worldwide for CEN national Members.

Ref. No. EN 1873:2014/FprA1:2015:2015 E

SIST EN 1873:2014/kFprA1:2015

Contents

Page

iTeh STANDARD PREVIEW
(standards.iteh.ai)

SIST EN 1873:2014/kFprA1:2015
https://standards.iteh.ai/catalog/standards/sist/47c32f68-5549-4042-8e5e-4290f825c0ca/sist-en-1873-2014-kfpra1-2015

SIST EN 1873:2014/kFprA1:2015

Foreword

This document (EN 1873:2014/FprA1:2015) has been prepared by Technical Committee CEN/TC 128 “Roof covering products for discontinuous laying and products for wall cladding”, the secretariat of which is held by NBN.

This document is currently submitted to the Unique Acceptance Procedure.

This document has been prepared under a mandate given to CEN by the European Commission and the European Free Trade Association.

iTeh STANDARD PREVIEW
(standards.iteh.ai)

SIST EN 1873:2014/kFprA1:2015
https://standards.iteh.ai/catalog/standards/sist/47c32f68-5549-4042-8e5e-4290f825c0ca/sist-en-1873-2014-kfpra1-2015

SIST EN 1873:2014/kFprA1:2015

1 Modification to Annex D "Determination of Thermal transmittance of rooflight"

In the entire annex please correct the explanation of Ψ_t, where necessary, to read: "linear thermal transmittance".

Replace Figure D.11 "Explanation of the factors for the calculation of individual rooflights with upstand, without edge profile":

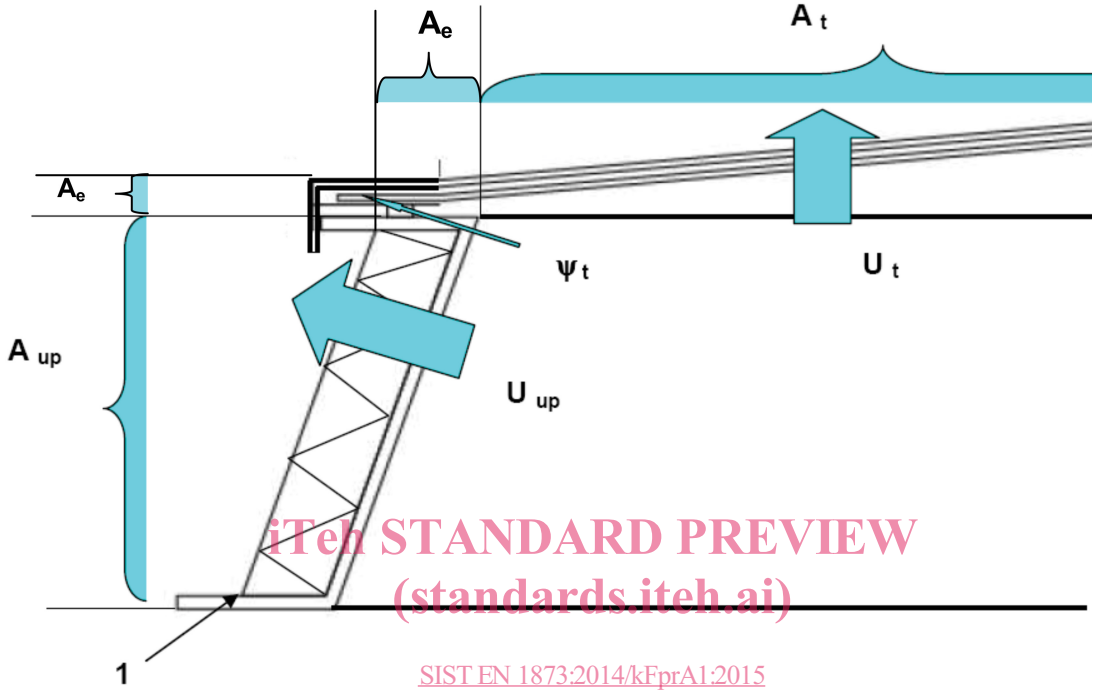

iTeh STANDARD PREVIEW
(standards.iteh.ai)
SIST EN 1873:2014/kFprA1:2015
https://standards.iteh.ai/catalog/standards/sist/47c32f68-5549-4042-8e5e-4290f825c0ca/sist-en-1873-2014-kfpra1-2015

Key

1 starting point of calculation

A_e the outer exposed surface of the connection (virtual edge profile)

A_t the outer exposed surface of the translucent part

A_{up} the outer exposed surface of the upstand

U_t the thermal transmittance of the translucent part

U_{up} the thermal transmittance of the upstand

Ψ_t the linear thermal transmittance in the transition zone of the translucent part and the connection (virtual edge profile)

Figure D.11 - Explanation of the factors for the calculation of individual rooflights with upstand, without edge profile

SIST EN 1873:2014/kFprA1:2015

Replace Formula D.12 with the following:

$$U_{rc} = \frac{A_{up} \cdot U_{up} + A_t \cdot U_t + l_t \cdot \Psi_t}{A_{up} + A_t + A_e} \quad [W/(m^2 \cdot K)] \qquad (D.12)$$

where

A_t the outer exposed surface of the translucent part, in m^2

A_e the outer exposed surface of the connection (virtual edge profile), in m^2

A_{up} the outer exposed surface of the upstand, in m^2

l_t length of the transition zone between translucent part and upstand equates to the perimeter of the translucent part, in m

U_t the thermal transmittance of the translucent part, in $W/(m^2 \cdot K)$

U_{up} the thermal transmittance of the upstand and edge profile, in $W/(m^2 \cdot K)$

Ψ_t the linear thermal transmittance in the transition zone of the translucent part and the connection (virtual edge profile), in W/(m·K)

Modify Table D.2 as follows:

iTeh STANDARD PREVIEW
(standards.iteh.ai)

Table D.2 - Overview of the reference models for individual rooflights without upstand

Type A Individual rooflight with only one translucent part	**Type B** Individual rooflight with two or more translucent parts
daylight size 1,20 m x 1,20 m	daylight size 1,50 m x 1,50 m
$U_{r,ref}$, $A_{r,ref}$	$U_{r,ref}$, $A_{r,ref}$

SIST EN 1873:2014/kFprA1:2015
https://standards.iteh.ai/catalog/standards/sist/47e52b88-3b79-4b42-8ebe-4290b82bc0ca/sist-en-1873-2014-kfpra1-2015

Modify Table D.3 as follows:

Table D.3 - Overview of the reference models for individual rooflights with upstand

Type A Individual rooflight with only one translucent part	**Type B** Individual rooflight with two or more translucent parts
roof opening size 1,20 m x 1,20 m	roof opening size 1,50 m x 1,50 m
$U_{rc,ref300}$, $A_{rc,ref300}$	$U_{rc,ref300}$, $A_{rc,ref300}$

SIST EN 1873:2014/kFprA1:2015

Substitute entire existing text of D.6 with the text below:

Manufacturers shall indicate:

— Value pair for the reference model: $U_{r,ref} / A_{r,ref}$ or $U_{rc,ref300} / A_{rc,ref300}$,

and should indicate:

— Value pair of the nominal size of the supplied product: U_r / A_r or U_{rc} / A_{rc}.

iTeh STANDARD PREVIEW
(standards.iteh.ai)

SIST EN 1873:2014/kFprA1:2015
https://standards.iteh.ai/catalog/standards/sist/47c32f68-5549-4042-8e5e-4290f825c0ca/sist-en-1873-2014-kfpra1-2015