INTERNATIONAL STANDARD

ISO 9345-1

Second edition
2012-06-15

Microscopes — Imaging distances related to mechanical reference planes —

Part 1: Tube length 160 mm

Microscopes — Tirages mécaniques en fonction des plans mécaniques de référence —

Partie 1: Longueur de tubes de 160 mm

Reference number
ISO 9345-1:2012(E)

ISO copyright office
Case postale 56 • CH-1211 Geneva 20
Tel. + 41 22 749 01 11
Fax + 41 22 749 09 47
E-mail copyright@iso.org
Web www.iso.org

Published in Switzerland

Foreword

ISO (the International Organization for Standardization) is a worldwide federation of national standards bodies (ISO member bodies). The work of preparing International Standards is normally carried out through ISO technical committees. Each member body interested in a subject for which a technical committee has been established has the right to be represented on that committee. International organizations, governmental and non-governmental, in liaison with ISO, also take part in the work. ISO collaborates closely with the International Electrotechnical Commission (IEC) on all matters of electrotechnical standardization.

International Standards are drafted in accordance with the rules given in the ISO/IEC Directives, Part 2.

The main task of technical committees is to prepare International Standards. Draft International Standards adopted by the technical committees are circulated to the member bodies for voting. Publication as an International Standard requires approval by at least 75 % of the member bodies casting a vote.

Attention is drawn to the possibility that some of the elements of this document may be the subject of patent rights. ISO shall not be held responsible for identifying any or all such patent rights.

ISO 9345-1 was prepared by Technical Committee ISO/TC 172, *Optics and photonics*, Subcommittee SC 5, *Microscopes and endoscopes*.

This second edition cancels and replaces the first edition (ISO 9345-1:1996) which has undergone a minor revision to align definitions with ISO 10934-1 and to adjust presentation to ISO 9345-2.

ISO 9345 consists of the following parts, under the general title *Microscopes — Imaging distances related to mechanical reference planes*:

— *Part 1: Tube length 160 mm*

— *Part 2: Infinity-corrected optical systems*

Microscopes — Imaging distances related to mechanical reference planes —

Part 1:
Tube length 160 mm

1 Scope

This part of ISO 9345 specifies the imaging distances of objectives and eyepieces of microscopes with 160 mm mechanical tube length or equivalent.

NOTE A specific combination of eyepiece and objective is frequently used to correct aberrations. Therefore, the combination of an objective from one manufacturer and an eyepiece from another manufacturer, although conforming to this International Standard, might cause loss of image quality.

2 Terms and definitions

For the purposes of this document, the following terms and definitions apply.

2.1
parfocalizing distance of the objective
distance in air between the object plane (i.e. the uncovered surface of the object) and the locating flange of the objective, when the microscope is in its working position

Note 1 to entry: The parfocalizing distance of the objective is one of the optical interfacing dimensions.

[ISO 10934-1:2002, definition 2.80.2.4]

2.2
objective to primary image distance
distance in air between the objective locating surface (of the nosepiece) and the primary image plane

Note 1 to entry: The objective to primary image distance is one of the optical interfacing dimensions and commonly has a value of either 150 mm or infinity. The latter is a hypothetical value applied to microscopes designed for infinity-corrected objectives.

[ISO 10934-1:2002, definition 2.80.2.1]

2.3
parfocalizing distance of the eyepiece
distance between the locating flange of the eyepiece and the plane upon which the eyepiece is focused

Note 1 to entry: The plane upon which the eyepiece is focused is coincident with the plane of the final real image of the microscope when the eyepiece is mounted in the viewing tube. The parfocalizing distance of the eyepiece is one of the optical interfacing dimensions, and is commonly 10 mm.

[ISO 10934-1:2002, definition 2.80.2.3]

2.4
mechanical tube length
for objectives corrected for a finite primary image distance it is the length of the tube in its simplest form (i.e. without any intermediate lenses) and is the distance in air between the objective-locating surface of the nosepiece and the eyepiece-locating surface of the viewing tube

Note 1 to entry: The mechanical tube length is one of the optical interfacing dimensions of the microscope.

Note 2 to entry: It commonly has a value of 160 mm (ISO 9345-1).

Note 3 to entry: For infinity-corrected objectives, the mechanical tube length is hypothetically considered to be infinite.

[ISO 10934-1:2002, definition 2.143.1]

3 Requirements

3.1 Nominal dimensions and tolerances

The nominal dimensions shall be as given in Table 1 and illustrated in Figure 1.

Table 1 — Nominal dimensions and tolerances

Feature	Symbol	Nominal value mm	Numerical aperture	Tolerance mm
Parfocalizing distance of the objective	l_1	45,00	≤ 0,1	±0,2
			> 0,1 to ≤ 0,25	±0,06
			> 0,25 to ≤ 0,45	±0,03
			> 0,45	±0,01
Objective to primary image distance	l_2	150,00		±0,5
Parfocalizing distance of the eyepiece	l_3	10,00		±0,3
Mechanical tube length	l_4	160,00		±0,5

NOTE 1 The tolerance ±0,2 for the parfocalizing distance of objectives with numerical aperture ≤0,1 does not necessarily apply to an objective with magnification lower than 4× .

NOTE 2 The parfocalizing distance of 45 mm given in Table 1 and shown in Figure 1 is intended to apply to objectives when used with uncovered objects (specimens). Objectives for use with objects covered by a coverglass shall have a parfocalizing distance as follows, to allow for the virtual displacement of the object by the coverglass:

$$l_1 + t\,\frac{n-1}{n}\ \text{mm}$$

where

t is the thickness of the coverglass;

n is the refractive index of the glass.

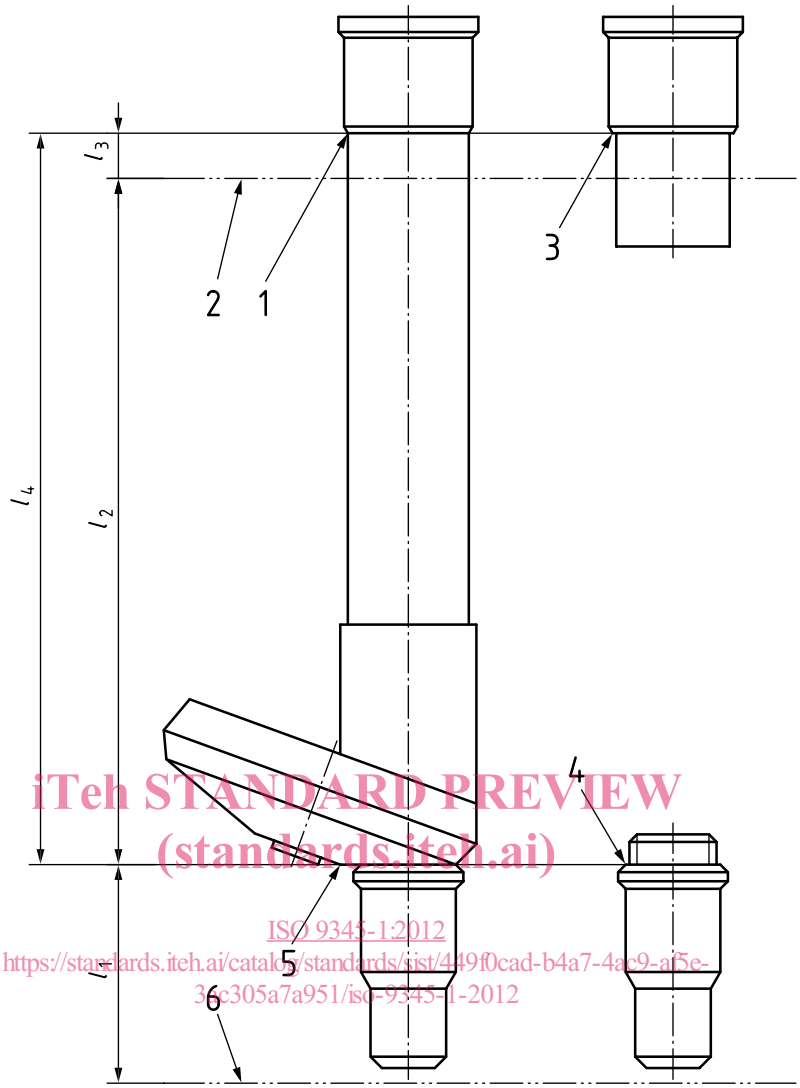

Key

1 eyepiece-locating surface of the viewing tube
2 primary image plane
3 locating flange of the eyepiece
4 locating flange of the objective
5 objective-locating surface (of the nosepiece)
6 object plane

NOTE Many microscopes have built-in prisms and lenses to change the position and/or the magnification of the image. In this case, the microscope shall have a construction such that, in combination with objectives conforming to this part of ISO 9345, the primary image is produced 10 mm below the eyepiece-locating surface of the viewing tube.

Figure 1 — Locating surfaces, reference planes and imaging distances

3.2 Examples

Figure 2 illustrates the influence of different cover glass thicknesses on the parfocalizing distance.

Dimensions in millimetres

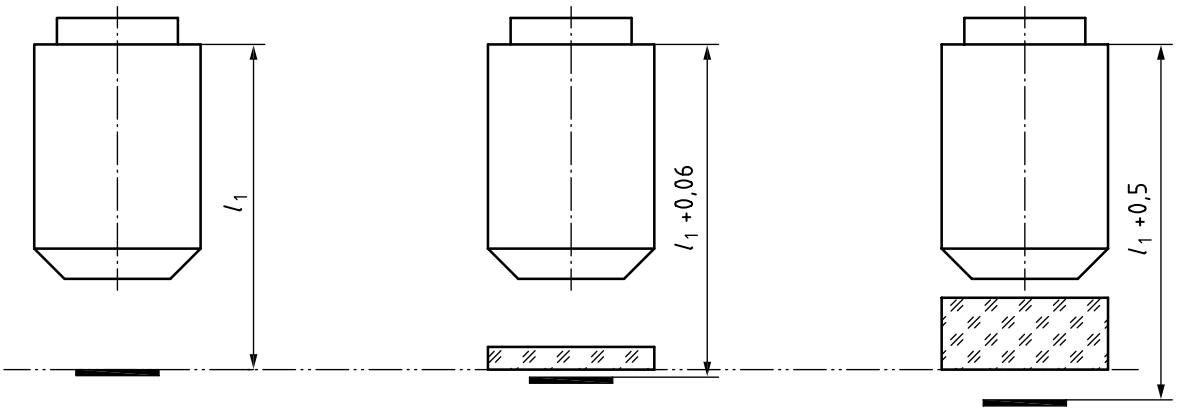

Uncovered object	Object with cover glass	Object with culture chamber
t = 0 mm	t = 0,17 mm thickness	t = 1,5 mm bottom thickness
	n = 1,5	n = 1,5
$l_{CG} = l_1$[a]	$l_{CG} = l_1 + 0{,}06$ mm[a]	$l_{CG} = l_1 + 0{,}5$ mm[a]

[a] l_{CG} is the resulting parfocalizing distance due to different cover glass thickness.

Figure 2 — Examples of parfocalizing distances as function of cover glass thickness

4 Marking

If the magnification of the primary image is changed by built-in optical systems, the tube factor shall be marked on the magnification changing component (stand, tube etc.).

EXAMPLE 1,25×

Bibliography

[1] ISO 8039, *Microscopes — Values, tolerances and symbols for magnification*

[2] ISO 9345-2, *Optics and optical instruments — Microscopes: Imaging distances related to mechanical reference planes — Part 2: Infinity-corrected optical systems*

[3] ISO 10934-1, *Optics and optical instruments — Vocabulary for microscopy — Part 1: Light microscopy*