ETSI TS 126 501 V16.4.1 (2020-09)

5G;
5G Media Streaming (5GMS);
General description and architecture
(3GPP TS 26.501 version 16.4.1 Release 16)

iTeh STANDARD PREVIEW
(standards.iteh.ai)
Full standard:
https://standards.iteh.ai/catalog/standards/sist/5557d5a-19d5-4e03-8f19-10de13f8d805/etsi-ts-126-501-v16.4.1-2020-09

3GPP 5G
A GLOBAL INITIATIVE

Reference
DTS/TSGS-0426501vg41

Keywords
5G

ETSI

650 Route des Lucioles
F-06921 Sophia Antipolis Cedex - FRANCE

Tel.: +33 4 92 94 42 00 Fax: +33 4 93 65 47 16

Siret N° 348 623 562 00017 - NAF 742 C
Association à but non lucratif enregistrée à la
Sous-Préfecture de Grasse (06) N° 7803/88

iTeh STANDARD PREVIEW
(standards.iteh.ai)
Full standard:
https://standards.iteh.ai/catalog/standards/sist/0257d5a-1315-4b8b-b1de-13f0b0/etsi-ts-126-501-v16.4.1-2020-09

Important notice

The present document can be downloaded from:
http://www.etsi.org/standards-search

The present document may be made available in electronic versions and/or in print. The content of any electronic and/or print versions of the present document shall not be modified without the prior written authorization of ETSI. In case of any existing or perceived difference in contents between such versions and/or in print, the prevailing version of an ETSI deliverable is the one made publicly available in PDF format at www.etsi.org/deliver.

Users of the present document should be aware that the document may be subject to revision or change of status. Information on the current status of this and other ETSI documents is available at
https://portal.etsi.org/TB/ETSIDeliverableStatus.aspx

If you find errors in the present document, please send your comment to one of the following services:
https://portal.etsi.org/People/CommiteeSupportStaff.aspx

Copyright Notification

No part may be reproduced or utilized in any form or by any means, electronic or mechanical, including photocopying and microfilm except as authorized by written permission of ETSI.
The content of the PDF version shall not be modified without the written authorization of ETSI.
The copyright and the foregoing restriction extend to reproduction in all media.

© ETSI 2020.
All rights reserved.

DECT™, **PLUGTESTS™**, **UMTS™** and the ETSI logo are trademarks of ETSI registered for the benefit of its Members.
3GPP™ and **LTE™** are trademarks of ETSI registered for the benefit of its Members and of the 3GPP Organizational Partners.
oneM2M™ logo is a trademark of ETSI registered for the benefit of its Members and of the oneM2M Partners.
GSM® and the GSM logo are trademarks registered and owned by the GSM Association.

Intellectual Property Rights

Essential patents

IPRs essential or potentially essential to normative deliverables may have been declared to ETSI. The information pertaining to these essential IPRs, if any, is publicly available for **ETSI members and non-members**, and can be found in ETSI SR 000 314: *"Intellectual Property Rights (IPRs); Essential, or potentially Essential, IPRs notified to ETSI in respect of ETSI standards"*, which is available from the ETSI Secretariat. Latest updates are available on the ETSI Web server (https://ipr.etsi.org/).

Pursuant to the ETSI IPR Policy, no investigation, including IPR searches, has been carried out by ETSI. No guarantee can be given as to the existence of other IPRs not referenced in ETSI SR 000 314 (or the updates on the ETSI Web server) which are, or may be, or may become, essential to the present document.

Trademarks

The present document may include trademarks and/or tradenames which are asserted and/or registered by their owners. ETSI claims no ownership of these except for any which are indicated as being the property of ETSI, and conveys no right to use or reproduce any trademark and/or tradename. Mention of those trademarks in the present document does not constitute an endorsement by ETSI of products, services or organizations associated with those trademarks.

Legal Notice

This Technical Specification (TS) has been produced by ETSI 3rd Generation Partnership Project (3GPP).

The present document may refer to technical specifications or reports using their 3GPP identities. These shall be interpreted as being references to the corresponding ETSI deliverables.

The cross reference between 3GPP and ETSI identities can be found under http://webapp.etsi.org/key/queryform.asp.

iTeh STANDARD PREVIEW
(standards.iteh.ai)
Full standard:
https://standards.iteh.ai/catalog/standards/sist/a557d5a-19d5-4e03-8f2b-10de13f8d805/etsi-ts-126-501-v16.4.1-2020-09

Modal verbs terminology

In the present document "**shall**", "**shall not**", "**should**", "**should not**", "**may**", "**need not**", "**will**", "**will not**", "**can**" and "**cannot**" are to be interpreted as described in clause 3.2 of the ETSI Drafting Rules (Verbal forms for the expression of provisions).

"**must**" and "**must not**" are **NOT** allowed in ETSI deliverables except when used in direct citation.

Contents

Intellectual Property Rights 2
Legal Notice 2
Modal verbs terminology 2
Foreword 5
1 Scope 6
2 References 6
3 Definition of terms, symbols and abbreviations 7
3.1 Terms 7
3.2 Symbols 8
3.3 Abbreviations 9
4 Media Streaming General Service Architecture 10
4.1 Overall Media Architecture 10
4.2 5G Unicast Downlink Media Streaming Architecture 12
4.2.1 Standalone – Non-Roaming 12
4.2.2 UE 5GMSd Functions 15
4.2.3 Service Access Information for Downlink Media Streaming 17
4.3 5G Uplink Media Streaming Architecture 18
4.3.1 Media Architecture 18
4.3.2 UE Media Functions 21
4.4 Network Slicing for Downlink Media Streaming 22
5 Procedures for Downlink Media Streaming 23
5.1 General 23
5.2 Baseline procedure for Unicast Downlink Media Streaming Session establishment 25
5.2.1 General 25
5.2.2 Progressive Download of On-Demand Content 25
5.2.3 DASH Streaming 27
5.3 Provisioning Session for Media Streaming 28
5.3.1 Domain model 28
5.3.2 Baseline provisioning procedure 30
5.4 Content Hosting Configuration for Downlink Media Streaming 32
5.4.1 General 32
5.4.2 Media ingest procedure 33
5.5 Metrics collection and reporting 34
5.5.1 General 34
5.5.2 Out-of-band-controlled reporting procedure 34
5.5.3 In-band-controlled reporting procedure 36
5.5.4 Metrics collection configuration parameters 37
5.6 Consumption reporting 38
5.6.1 Consumption reporting procedure 38
5.6.2 Consumption reporting parameters 40
5.6.3 Triggering consumption reporting 40
5.7 Establishing a Unicast Downlink Media Streaming Session with 5GMSd AF interactions for dynamic policy updates 40
5.7.1 General 40
5.7.2 Provisioning 41
5.7.3 Progressive Download of On-Demand Content 42
5.7.4 DASH Streaming 45
5.7.5 Parameters for dynamic policy invocation configuration 47
5.8 Dynamic Policy based on Network Slicing for Downlink Media Streaming 48
5.9 Downlink Network Assistance 49
5.9.1 Introduction 49
5.9.2 5GMSd AF-based downlink Network Assistance 49
5.9.3 ANBR-based downlink Network Assistance 50

iTeh STANDARD PREVIEW
(standards.iteh.ai)
Full standard:
https://standards.iteh.ai/catalog/standards/sist/a5537d5a-19d5-4eb6-8319-10de13bd8855/etsi-ts-126-501-v16.4.1-2020-09

6 Procedures for Uplink Media Streaming 51
6.1 General 51
6.2 Preparing for Uplink Media Streaming 53
6.2.1 Introduction 53
6.2.2 Sink Configuration at the 5GMSu AF/AS 53
6.2.3 Source Configuration at the UE 53
6.3 Establishment of an Uplink Media Streaming Session 55
6.4 Termination of an Uplink Media Streaming Session 56
6.5 Providing 5GMSu AF-based Network Assistance 57
6.6 Providing Remote Control 57
6.7 RAN Signalling based Support for Uplink Network Assistance 58

7 5GMS Network Media Processing 59
7.1 General 59
7.2 Media Processing Procedures for Downlink 59
7.3 Media Processing Procedures for Uplink 61
7.4 Edge Computing 61

Annex A (informative): Usage Guidelines for collaboration scenarios 62
A.0 General 62
A.1 Collaboration 1 62
A.2 Collaboration 2 63
A.3 Collaboration 3 63
A.4 Collaboration 4 64
A.5 Collaboration 5 64
A.6 Collaboration 6 65
A.7 Collaboration 7 65
A.8 Collaboration 8 66
A.9 Collaboration 9 67

Annex B (informative): MNO-specific Service Access Information acquisition 68
B.1 General 68
B.2 Deployment with DNS-based resolution 68
B.3 Deployment with HTTPS-based resolution 70

Annex C (informative): Change history 72

History 73

iTeh STANDARD PREVIEW
(standards.iteh.ai)
Full standard:
https://standards.iteh.ai/catalog/standards/sist/a5557d5a-19d5-4e03-8f19-10dc13f8d805/etsi-ts-126-501-v16.4.1-2020-09

Foreword

This Technical Specification has been produced by the 3rd Generation Partnership Project (3GPP).

The contents of the present document are subject to continuing work within the TSG and may change following formal TSG approval. Should the TSG modify the contents of the present document, it will be re-released by the TSG with an identifying change of release date and an increase in version number as follows:

Version x.y.z

where:

x the first digit:

1 presented to TSG for information;

2 presented to TSG for approval;

3 or greater indicates TSG approved document under change control.

y the second digit is incremented for all changes of substance, i.e. technical enhancements, corrections, updates, etc.

z the third digit is incremented when editorial only changes have been incorporated in the document.

iTeh STANDARD PREVIEW
(standards.iteh.ai)
Full standard:
https://standards.iteh.ai/catalog/standards/sist/a5557d5a-19d5-4e03-8f19-10de13f8d805/etsi-ts-126-501-v16.4.1-2020-09

1 Scope

The present document specifies the 5G Media Streaming (5GMS) architecture. The 5GMS supported services include MNO and third-party Downlink Media Streaming Services, and MNO and third-party Uplink Media Streaming Services. The 5GMS architecture supports related network and UE functions and APIs, backwards compatible functions for EUTRAN deployments (with and without MBMS) and 5G specific features.

NOTE: Support of 5G Media Streaming over MBMS with 5GC is not considered in the current version of the present document.

The 5GMS architecture is functionally divided into independent components enabling different deployments with various degrees of integration between 5G MNOs and Content Providers. It is specified as a set of extensions to TS 23.501 "System Architecture for the 5G System".

2 References

The following documents contain provisions which, through reference in this text, constitute provisions of the present document.

- References are either specific (identified by date of publication, edition number, version number, etc.) or non-specific.
- For a specific reference, subsequent revisions do not apply.
- For a non-specific reference, the latest version applies. In the case of a reference to a 3GPP document (including a GSM document), a non-specific reference implicitly refers to the latest version of that document *in the same Release as the present document*.

[1] 3GPP TR 21.905: "Vocabulary for 3GPP Specifications".

[2] 3GPP TS 23.501: "System architecture for the 5G System (5GS)".

[3] 3GPP TS 23.502: "Procedures for the 5G System (5GS)".

[4] 3GPP TS 23.503: "Policy and charging control framework for the 5G System (5GS); Stage 2".

[5] 3GPP TS 26.238: "Uplink streaming".

[6] 3GPP TS 26.307: "Presentation layer for 3GPP services".

[7] 3GPP TS 26.247: "Transparent end-to-end Packet-switched Streaming Service (PSS); Progressive Download and Dynamic Adaptive Streaming over HTTP (3GP-DASH)".

[8] 3GPP TS 26.234: "Transparent end-to-end Packet-switched Streaming Service (PSS); Protocols and codecs".

[9] 3GPP TS 23.003: "Technical Specification Group Core Network and Terminals; Numbering, addressing and identification".

[10] 3GPP TS 28.530: "Management and orchestration; Concepts, use cases and requirements".

[11] 3GPP TS 28.531: "Management and orchestration; Provisioning".

[12] 3GPP TS 28.541: "Management and orchestration; 5G Network Resource Model (NRM); Stage 2 and stage 3".

[13] 3GPP TS 23.222: "Common API Framework for 3GPP Northbound APIs".

[14] IETF RFC 1034: "Domain names – concepts and facilities".

iTeh STANDARD PREVIEW (standards.iteh.ai) Full standard: https://standards.iteh.ai/catalog/standards/sist/a5557d5a-19d5-5503-8f9-100c13f80995/etsi-ts-126-501-v16.4.1-2020-09

3 Definition of terms, symbols and abbreviations

3.1 Terms

For the purposes of the present document, the terms given in TR 21.905 [1] and the following apply. A term defined in the present document takes precedence over the definition of the same term, if any, in TR 21.905 [1].

5GMS System: An assembly of Application Functions, Application Servers and interfaces from the 5G Media Streaming architecture that support either downlink media streaming services or uplink media streaming services, or both.

NOTE 1: The components of a 5GMS System may be provided by an MNO as part of a 5GS and/or by a 5GMS Application Provider.

5GMS Application Provider: A party that interacts with functions of the 5GMS System and supplies a 5GMS-Aware Application that interacts with functions of the 5GMS System.

5GMS-Aware Application: Application in the UE, provided by the 5GMS Application Provider, that contains the service logic of the 5GMS application service, and interacts with other 5GMS Client and Network functions via the interfaces and APIs defined in the 5GMS architecture.

NOTE 2: Functionality of the 5GMS-Aware Application is outside the scope of this specification.

NOTE 3: A 5GMS-Aware Application associated with the delivery of either a downlink or uplink related 5GMS service is referred to as a 5GMSd-Aware Application or a 5GMSu-Aware Application, respectively.

5GMS Client: A UE function that is either a 5GMSd Client or a 5GMSu Client, or both.

5G Media Streaming Client for downlink (5GMSd Client): UE function that includes at least a 5G Media Streaming Player and a Media Session Handler for downlink streaming and that may be accessed through well-defined interfaces/APIs.

5G Media Streaming Client for uplink (5GMSu Client): Originator of 5GMSu service that may be accessed through well-defined interfaces/APIs.

5GMSu Media Streamer: UE function that enables uplink delivery of streaming media content to an Application Server function of the 5GMS Application Provider, and which interacts with both the 5GMSu-Aware Application for media capture and subsequent streaming, and the Media Session Handler for media session control.

NOTE 4: The 5GMSu Media Streamer receives a Media Streamer Entry to initiate an uplink streaming session.

NOTE 5: The 5GMSu Media Streamer captures the media on the provided input devices. The 5GMSu Media Streamer exposes some basic controls such as capture, pause, and stop to the 5GMSu-Aware Application.

Dynamic policy: A Dynamic PCC Rule (c.f. TS 23.503[4]) for an uplink or downlink application flow during a media session.

Egest Session: An uplink media streaming session from the 5GMSu AS towards the 5GMSu Application Provider.

Ingest Session: A session to upload the media content into a 5GMSd AS.

Policy Template: A collection of (semi-static) PCF/NEF API parameters which are specific to the 5GMS Application Provider and also the resulting PCC Rule.

Policy Template Id: Identifies the desired policy template, which is used by 5GMSd AF to select the appropriate PCF/NEF API towards the 5G System so that the PCF can compile the desired PCC Rule.

Media Player Entry: a document or a pointer to a document that defines a media presentation e.g. MPD for DASH content or URL to a video clip file.

Media Streamer Entry: A pointer (e.g. in the form of a URL) that defines an entry point of an uplink media streaming session.

iTeh STANDARD PREVIEW
(standards.iteh.ai)
Full standard:
https://standards.iteh.ai/catalog/standards/sist/de03a91b-1008-13f8d802-etsi-ts-126-501-v16.4.1-2020-09

presentation entry: A document or a pointer to a document that defines an application presentation e.g. an HTML5 document as defined in e.g. TS 26.307 [6].

Provisioning Session: a data structure supplied at interface M1d by a 5GMSd Application Provider that configures the 5GMSd features relevant to a set of 5GMSd-Aware Applications.

5GMSd Media Player: UE function that enables playback and rendering of a media presentation based on a media player entry and exposing some basic controls such as play, pause, seek, stop to the 5GMSd-Aware Application.

NOTE 6: A 5GMSd Media Player is expected to include a Media Access Client, Media Decoders, Media rendering/presentation, and possibly also DRM Client and Metrics Collection and Reporting. The 5GMSd Media Player's Media Access Client receives a Media Player Entry. The 5GMSd Media Player renders the media on the provided output devices, such as a display in case of video.

NOTE 7: The 5GMSd Media Player is functionally similar to the combination of a TS 26.247 [7] 3GP-DASH client and a TS 26.234 [8] PSS media decoder and renderer.

Service Access Information: Set of parameters and addresses (including 5GMSd AF and 5GMSd AS addresses), which are needed to activate the reception of a streaming session.

Service and Content Discovery: Functionality and procedures provided by a 5GMSd Application Provider to a 5GMS-Aware Application that enables the end user to discover the available streaming service and content offerings and select a specific service or content item for access.

NOTE 8: The Service and Content Discovery functionality and procedures are outside the scope of this specification.

Service Announcement: Procedures conducted between the 5GMS-Aware Application and the 5GMS Application Provider such that the 5GMS-Aware Application is able to obtain 5GMS Service Access Information, either directly or in the form of a reference to that information.

third party player: Part of an application that uses APIs to exercise selected 5GMSd functions to play back media content.

NOTE 9: Such APIs are for example defined in TS 26.307 [6] when using the Media Source Extensions for media playback. This type of player is downloaded by or built into an application, or it is downloaded with the Presentation Entry (e.g. as a JavaScript library).

third party uplink streamer: Part of an application that uses APIs to exercise selected 5GMSu functions to capture and stream media content.

NOTE 10: This type of streamer is typically implemented as downloadable software.

iTeh STANDARD PREVIEW
(standards.iteh.ai)
Full standard:
https://standards.iteh.ai/catalog/standards/sist/5537d5a-19d8-4403-8f19-10de15adb5/etsi-ts-126-501-v16.4.1-2020-09

3.2 Symbols

Void.

3.3 Abbreviations

For the purposes of the present document, the abbreviations given in TR 21.905 [1] and the following apply. An abbreviation defined in the present document takes precedence over the definition of the same abbreviation, if any, in TR 21.905 [1].

5GC	5G Core Network
5GMS	5G Media Streaming
5GMSd	5G Media Streaming downlink
5GMSu	5G Media Streaming uplink
5GS	5G Systems
AF	Application Function
ABR	Adaptive Bit Rate
AMF	Access and Mobility Function
API	Application Programming Interface
App	Application
AS	Application Server
CAPIF	Common API Framework
CDN	Content Delivery Network
DASH	Dynamic and Adaptive Streaming over HTTP
DN	Data Network
DNAI	Data Network Application Identifier
DNN	Data Network Name
DRM	Digital Rights Management
EPC	Evolved Packet Core
EPS	Evolved Packet System
EUTRAN	Evolved Universal Terrestrial Radio Access Network
FLUS	Framework for Live Uplink Streaming
FQDN	Fully-Qualified Domain Name
GPU	Graphics Processing Unit
GSM	Global System for Mobile communication
HPLMN	Home Public Land Mobile Network
HTTP	HyperText Transfer Protocol
HTTPS	HyperText Transfer Protocol Secure
LTE	Long-Term Evolution
MBMS	Multimedia Broadcast Multicast System
MNO	Mobile Network Operator
MPD	Media Presentation Description
MSISDN	Mobile Station International Subscriber Directory Number
NA	Network Assistance
NEF	Network Exposure Function
NR	New Radio
NSMF	Network Slice Management Function
NSSAI	Network Slice Selection Assistance Information
NSSP	Network Slice Selection Policy
OAM	Operations, Administration and Maintenance
OTT	Over-The-Top
PCC	Policy and Charging Control
PCF	Policy and Charging Function
PDU	Packet Data Unit
PSS	Packet-switched Streaming Service
RAN	Radio Access Network
SBA	Service based Architecture
SLA	Service Level Agreement
TCP	Transmission Control Protocol
URL	Unique Resource Identifier
URSP	UE Route Selection Policy

iTeh STANDARD PREVIEW
(standards.iteh.ai)
Full standard:
https://standards.iteh.ai/catalog/standards/sist/a5557d5a-19d5-4053-8819-1b8c1388d805/etsi-ts-126-501-v16.4.1-2020-09

4 Media Streaming General Service Architecture

4.1 Overall Media Architecture

Streaming in the context of this specification is defined as the delivery of time-continuous media as the predominant media. Streaming points to the fact that the media is predominantly sent only in a single direction and consumed as it is received. Additionally, the media content may be streamed as it is produced, referred to as live streaming. If content is streamed that is already produced, it is referred to as on-demand streaming.

The overall 5G Media Streaming Architecture is shown in Figure 4.1-1 below.

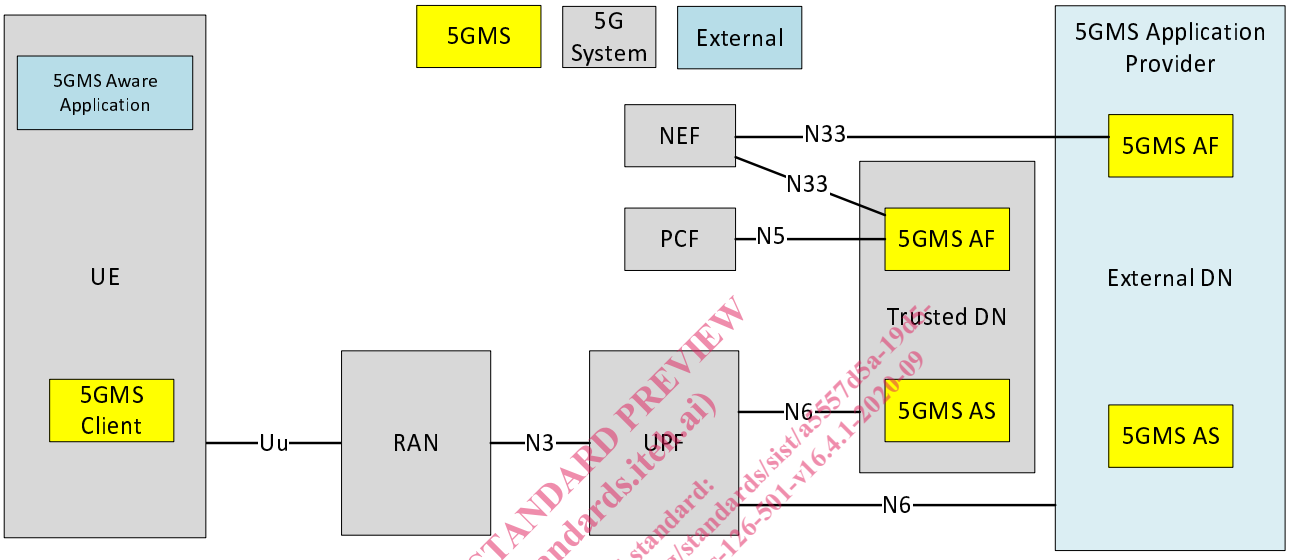

Figure 4.1-1: 5G Media Streaming within the 5G System

iTeh STANDARD PREVIEW (standards.iteh.ai) Full standard: https://standards.iteh.ai/catalog/standards/sist/a557d5a-1906-1a00-8f19-5d6131f1805/etsi-ts-126-501-v16.4.1-2020-09

NOTE: The functions indicated by the yellow filled boxes are in scope of stage 3 specifications for 5GMS. The functions indicated by the grey boxes are defined in 5G System specifications. The functions indicated by the blue boxes are neither in scope of 5G Media Streaming nor 5G System specifications.

The 5GMS Application Provider uses 5GMS for streaming services. It provides a 5GMS Aware-Application on the UE to make use of 5GMS Client and network functions using interfaces and APIs defined in 5GMS.

The architecture in Figure 4.1-1 represents the specified 5GMS functions within the 5G System (5GS) as defined in TS 23.501 [2]. Three main functions are defined:

- **5GMS AF:** An Application Function similar to that defined in TS 23.501 [2] clause 6.2.10, dedicated to 5G Media Streaming.
- **5GMS AS:** An Application Server dedicated to 5G Media Streaming.
- **5GMS Client:** A UE internal function dedicated to 5G Media Streaming.

5GMS AF and 5GMS AS are Data Network (DN) functions and communicate with the UE via N6 as defined in TS 23.501 [2].

Functions in trusted DNs, i.e. 5GMS AFs in the external DNs, are trusted by the operator's network as illustrated in Figure 4.2.3-5 of TS 23.501 [2]. Therefore, AFs in trusted DNs may directly communicate with relevant 5G Core functions.

Functions in external DNs may only communicate with 5G Core functions via the NEF using N33.

The present document specifies the according network architectures for 5GS. The 5GMS architecture may be applied to an EPS although such an application is not specified in the present document and is left to the discretion of deployments and implementations.

The 5G Media Services Architecture maps the overall high-level architecture shown in Figure 4.1-1 above to the general architecture shown in Figure 4.1-2 below.

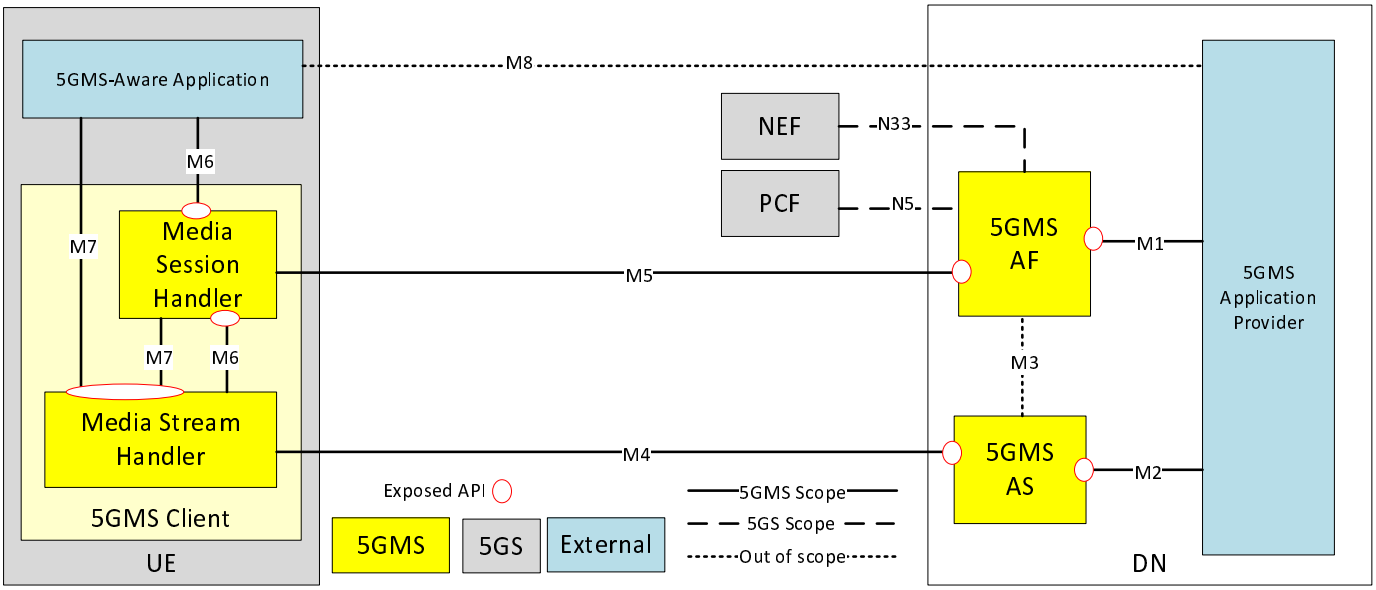

Figure 4.1-2: 5G Media Streaming General Architecture

NOTE: In Figure 4.1-2 the 5GMS Client in the UE is depicted in the form of a UE that exposes APIs to the constituent functions Media Session Handler and Media Stream Handler in the same way that the same APIs are exposed to 5GMS-aware applications. This UE architecture is not applicable generally; it is just as valid to implement a 5GMS Client that does not expose interfaces M6 ad M7 within the 5GMS Client. It is also valid for a 5GMS Client inside a UE to be completely self-contained, such that all functionality typically implemented in the 5GMS-aware application is embedded in the UE and thus interfaces M6 and M7 are not exposed at all.

iTeh STANDARD PREVIEW
(standards.iteh.ai)
Full standard:
https://standards.iteh.ai/catalog/standards/sist/5557c6a-19de-de03-8819-10de13f8d80/etsi-ts-126-501-v16.4.1-2020-09

The remainder of the present document specifies stage 2 aspects of the media streaming functional entities shown in the general architecture of Figure 4.1-2.

This architecture specification addresses two main scenarios as concerns each individual media streaming operation:

- **Downlink streaming:** The network is the origin of the media and the UE acts as the consumption device.
- **Uplink streaming:** The UE is the origin of the media and the network acts as the consumption entity.

The functional entities and interfaces of the media streaming general architecture need to be elaborated with specificities relating to downlink and uplink streaming. For this purpose corresponding descriptions add the suffix “d” for downlink and “u” for uplink functionality as appropriate in each case.

Clause 4.2 introduces the 5G Unicast Downlink Media Streaming architecture.

Clause 4.3 introduces the 5G Unicast Uplink Media Streaming architecture.

4.2 5G Unicast Downlink Media Streaming Architecture

4.2.1 Standalone – Non-Roaming

The 5GMSd Application Provider uses 5GMSd functions for downlink streaming services. It provides a 5GMSd-Aware Application on the UE the ability to make use of 5GMSd Client and network functions using 5GMSd interfaces and APIs.

The architecture in Figure 4.2.1-1 below represents the specified 5GMSd functions within the 5G System (5GS) as defined in TS23.501 [2]. Three main functions are defined:

- **5GMSd AF:** An Application Function similar to that defined in TS 23.501 [2] clause 6.2.10, dedicated to 5G Downlink Media Streaming.
- **5GMSd AS:** An Application Server dedicated to 5G Downlink Media Streaming.
- **5GMSd Client:** A UE internal function dedicated to 5G Downlink Media Streaming.

5GMSd AF and 5GMSd AS are Data Network (DN) functions and communicate with the UE via N6 as defined in TS 23.501 [2].

Functions in trusted DNs are trusted by the operator's network as illustrated in Figure 4.2.3-5 of TS 23.501 [2]. Therefore, AFs in trusted DNs may directly communicate with relevant 5G Core functions.

Functions in external DNs, i.e. 5GMSd AFs in external DNs, may only communicate with 5G Core functions via the NEF using N33.

NOTE 1: The 5GMS architecture may be applied to an EPS although such an application is not specified in the present document and is left to the discretion of deployments and implementations.

iTeh STANDARD PREVIEW (standards.iteh.ai) Full standard: https://standards.iteh.ai/catalog/standards/sist/5557d5a-9d5-4e03-8f19-10de131fd805/etsi-ts-126-501-v16.4.1-2020-09

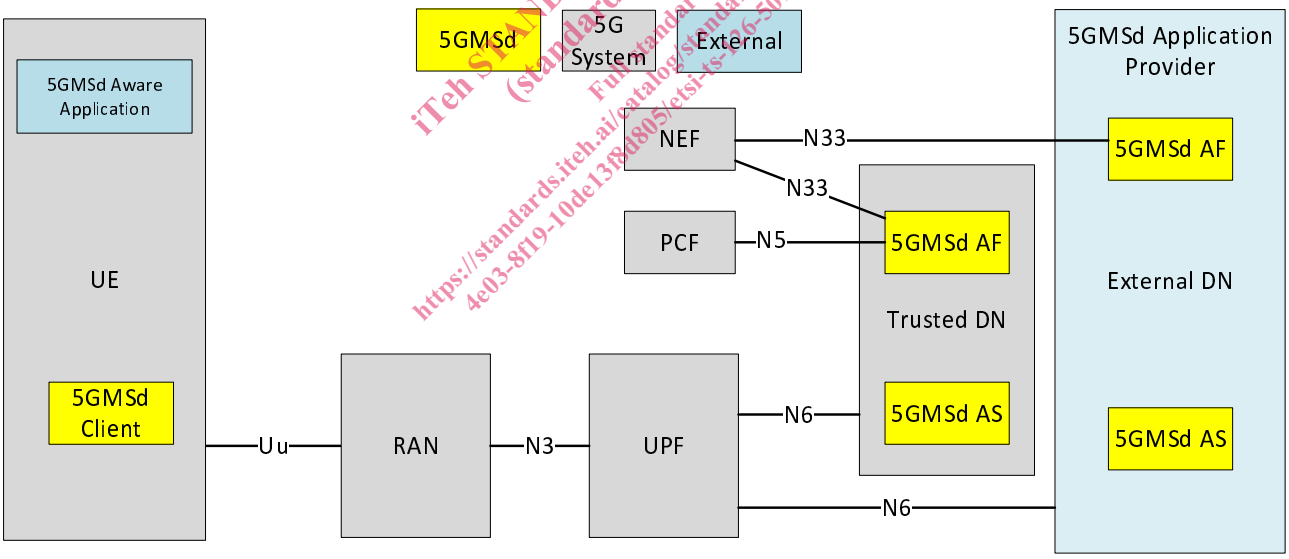

Figure 4.2.1-1: 5G Downlink Media Streaming within 5G System

NOTE 2: The functions indicated by the yellow filled boxes are in scope of stage 3 specifications for 5GMS. The functions indicated by the grey boxes are defined in 5G System specifications. The functions indicated by the blue boxes are neither in scope of 5G Media Streaming nor 5G System specifications.