# SLOVENSKI STANDARD
# SIST EN 302 092-3 V1.1.1:2005

**01-januar-2005**

---

**Ġirokopasovno digitalno omreǵje z integriranimi storitvami (B-ISDN) in ġirokopasovno zasebno omreǵje z integriranimi storitvami (B-PISN) ï Digitalna naroļ niġka signalizacija ġt. 2 (DSS2), ġirokopasovna signalizacija med centralami (B-QSIG) in signalizacija ġt. 7 (SS7) ï Krmiljenje klica v okolju loļ enega krmiljenja klica in nosilca ï 3. del: Zgradba preskuġalnega niza in namen preskuġanja (TSS&TP) ï Specifikacija**

Broadband Integrated Services Digital Network (B-ISDN) and Broadband Private Integrated Services Network (B-PISN); Digital Subscriber Signalling System No. two (DSS2), Broadband Inter-Exchange Signalling (B-QSIG), and Signalling System No. 7 (SS7); Call control in a separated call and bearer control environment; Part 3 : Test Suite Structure and Test Purposes (TSS&TP) specification



**Ta slovenski standard je istoveten z: EN 302 092-3 Version 1.1.1**

---

**ICS:**

| | | |
|---|---|---|
| 33.040.35 | Telefonska omrežja | Telephone networks |
| 33.080 | Digitalno omrežje z integriranimi storitvami (ISDN) | Integrated Services Digital Network (ISDN) |

**SIST EN 302 092-3 V1.1.1:2005 en**

# ETSI EN 302 092-3 V1.1.1 (2000-08)

*European Standard (Telecommunications series)*

## Broadband Integrated Services Digital Network (B-ISDN) and Broadband Private Integrated Services Network (B-PISN); Digital Subscriber Signalling System No. two (DSS2), Broadband Inter-Exchange Signalling (B-QSIG), and Signalling System No. 7 (SS7); Call control in a separated call and bearer control environment; Part 3: Test Suite Structure and Test Purposes (TSS&TP) specification

Reference
DEN/SPS-05154-3

Keywords
bearer, B-ISDN, B-ISUP, B-QSIG, broadband, DSS2, ISDN, ISUP, QSIG, SS7, TSS&TP, user

***ETSI***

650 Route des Lucioles
F-06921 Sophia Antipolis Cedex - FRANCE

Tel.: +33 4 92 94 42 00 Fax: +33 4 93 65 47 16

Siret N° 348 623 562 00017 - NAF 742 C
Association à but non lucratif enregistrée à la
Sous-Préfecture de Grasse (06) N° 7803/88



***Important notice***

Individual copies of the present document can be downloaded from:
http://www.etsi.org

The present document may be made available in more than one electronic version or in print. In any case of existing or perceived difference in contents between such versions, the reference version is the Portable Document Format (PDF). In case of dispute, the reference shall be the printing on ETSI printers of the PDF version kept on a specific network drive within ETSI Secretariat.

Users of the present document should be aware that the document may be subject to revision or change of status. Information on the current status of this and other ETSI documents is available at http://www.etsi.org/tb/status/

If you find errors in the present document, send your comment to:
editor@etsi.fr

***Copyright Notification***

# Contents

# Intellectual Property Rights

IPRs essential or potentially essential to the present document may have been declared to ETSI. The information pertaining to these essential IPRs, if any, is publicly available for **ETSI members and non-members**, and can be found in ETSI SR 000 314: *"Intellectual Property Rights (IPRs); Essential, or potentially Essential, IPRs notified to ETSI in respect of ETSI standards"*, which is available from the ETSI Secretariat. Latest updates are available on the ETSI Web server (http://www.etsi.org/ipr).

Pursuant to the ETSI IPR Policy, no investigation, including IPR searches, has been carried out by ETSI. No guarantee can be given as to the existence of other IPRs not referenced in ETSI SR 000 314 (or the updates on the ETSI Web server) which are, or may be, or may become, essential to the present document.

# Foreword

This European Standard (Telecommunications series) has been produced by ETSI Technical Committee Services and Protocols for Advanced Networks (SPAN).

The present document is part 3 of a multi-part EN covering the Broadband Integrated Services Digital Network (B-ISDN) and Broadband Private Integrated Services Network (B-PISN); Digital Subscriber Signalling System No. 2 (DSS2), Broadband Inter-Exchange Signalling (B-QSIG), and Signalling System No. 7 (SS7); Call control specification in a separated call and bearer control environment, as described below:

Part 1: "Protocol specification";

Part 2: "Protocol Implementation Conformance Statement (PICS) proforma specification";

**Part 3: "Test Suite Structure and Test Purposes (TSS&TP) specification";**

Part 4: "Abstract Test Suite (ATS) and partial Protocol Implementation eXtra Information for Testing (PIXIT) proforma specification".



| National transposition dates | |
|---|---|
| Date of adoption of this EN: | 26 May 2000 |
| Date of latest announcement of this EN (doa): | 31 August 2000 |
| Date of latest publication of new National Standard or endorsement of this EN (dop/e): | 28 February 2001 |
| Date of withdrawal of any conflicting National Standard (dow): | 28 February 2001 |

# 1 Scope

The present document is applicable to the Call Control protocol at the $Q_B$, $S_B$, $T_B$ and co-incident $S_B/T_B$ reference points within, between and at the access to Broadband Private Integrated Services Networks and within, between and at the access to public Broadband Integrated Services Digital Networks.

The present document provides the Test Suite Structure and Test Purposes (TSS&TP) for the Call Control protocol as specified in EN 302 092-1 [1].

A further part of the present document specifies the Abstract Test Suite (ATS) and partial Protocol Implementation eXtra Information for Testing (PIXIT) proforma based on the present document.

# 2 References

The following documents contain provisions which, through reference in this text, constitute provisions of the present document.

- References are either specific (identified by date of publication, edition number, version number, etc.) or non-specific.
- For a specific reference, subsequent revisions do not apply.
- For a non-specific reference, the latest version applies.
- A non-specific reference to an ETS shall also be taken to refer to later versions published as an EN with the same number.



[1] ETSI EN 302 092-1 (V1.1): "Broadband Integrated Services Digital Network (B-ISDN) and Broadband Private Integrated Services Network (B-PISN); Digital Subscriber Signalling System No. two (DSS2), Broadband Inter-Exchange Signalling (B-QSIG), and Signalling System No.7 (SS7); Call control in a separated call and bearer control environment; Part 1: Protocol specification".

[2] ETSI EN 302 092-2 (V1.1): "Broadband Integrated Services Digital Network (B-ISDN) and Broadband Private Integrated Services Network (B-PISN); Digital Subscriber Signalling System No. two (DSS2), Broadband Inter-Exchange Signalling (B-QSIG), and Signalling System No.7 (SS7); Call control in a separated call and bearer control environment; Part 2: Protocol Implementation Conformance Statement (PICS) proforma specification".

[3] ISO/IEC 9646-1 (1994): "Information technology; Open Systems Interconnection; Conformance testing methodology and framework; Part 1: General concepts".

[4] ISO/IEC 9646-2 (1994): "Information technology; Open Systems Interconnection; Conformance testing methodology and framework; Part 2: Abstract Test Suite specification".

[5] ETSI ETS 300 406: "Methods for Testing and Specification (MTS); Protocol and profile conformance testing specifications; Standardization methodology".

# 3 Definitions and abbreviations

## 3.1 Definitions

For the purposes of the present document, the following terms and definitions apply in addition to the definitions in EN 302 092-1[1]:

**Abstract test case:** refer to ISO/IEC 9646-1 [3]

**Abstract Test Method (ATM):** refer to ISO/IEC 9646-1 [3]

**Abstract Test Suite (ATS):** refer to ISO/IEC 9646-1 [3]

**Implementation Under Test (IUT):** refer to ISO/IEC 9646-1 [3]

**Lower tester:** refer to ISO/IEC 9646-1 [3]

**Protocol Implementation Conformance Statement (PICS):** refer to ISO/IEC 9646-1 [3]

**PICS proforma:** refer to ISO/IEC 9646-1 [3]

**Protocol Implementation eXtra Information for Testing (PIXIT):** refer to ISO/IEC 9646-1 [3]

**PIXIT proforma:** refer to ISO/IEC 9646-1 [3]

**Test Purpose (TP):** refer to ISO/IEC 9646-1 [3]



## 3.2 Abbreviations

For the purposes of the present document, the following abbreviations apply:



| | |
|---|---|
| APDU | Application Protocol Data Unit |
| ATM | Abstract Test Method |
| ATS | Abstract Test Suite |
| DSS2 | Digital Subscriber Signalling System No. two |
| B-ISDN | Broadband Integrated Services Digital Network |
| B-PISN | Broadband Private Integrated Services Network |
| B-QSIG | Broadband Inter-Exchange Signalling System |
| CC | Call Control |
| CC0 | Call Idle state |
| CC1 | Call Initiated state |
| CC2 | Outgoing Call Proceeding state |
| CC3 | Call Ready state |
| CC4 | Call Present state |
| CC5 | Incoming Call Proceeding state |
| CC6 | Await Call Completion state |
| CC7 | Call Active state |
| CC8 | Call Release Request state |
| CC9 | Call Release Indication state |
| IUT | Implementation Under Test |
| PICS | Protocol Implementation Conformance Statement |
| PIXIT | Protocol Implementation eXtra Information for Testing |
| TP | Test Purpose |
| TSS | Test Suite Structure |

# 4 Test Suite Structure (TSS)

The test suite structure is a tree. Three test group levels are defined. The TSS is depicted in figure 1. The levels are the following:

**1st level:** the name representing the base specification (EN 302 092-1 [1]): DSS2_CC.

**2nd level:** the phases of the base specification:

- Call Establishment (CE);
- Call Status Change (SC);
- Call Clearing (CL).

**3rd level:** initiator or responder:

- Initiator (I);
- Responder (R).

**4th level:** the nature of the test:

- Valid (V);
- Invalid (IV);
- Inopportune (IO).



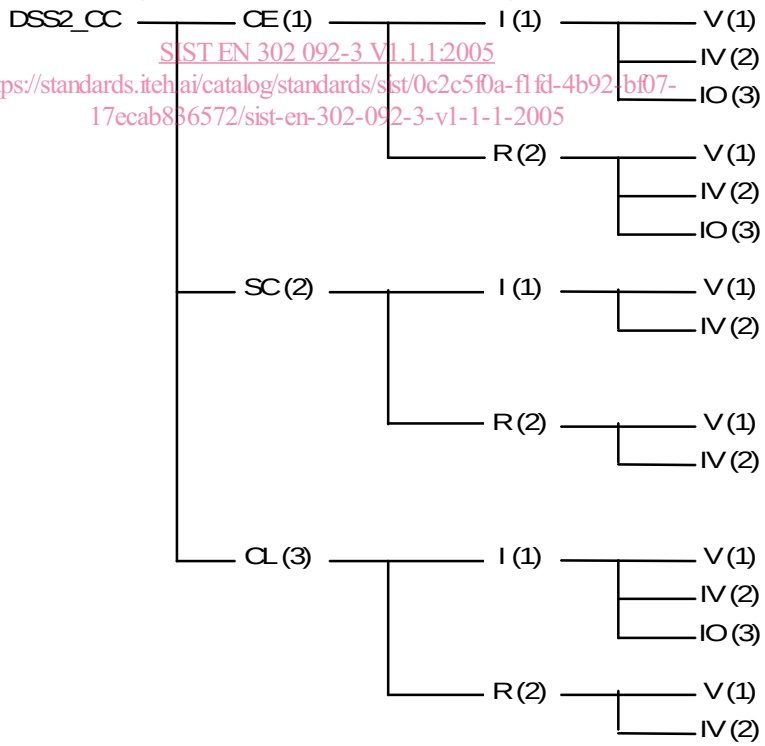


**Figure 1: Test suite structure**

# 5 Test Purposes (TP)

## 5.1 Introduction

For each test requirement a TP is defined.

### 5.1.1 TP naming convention

TPs are numbered, starting at 01, within each group. Groups are organized according to the TSS. Additional references are added to identify the actual test suite (see table 1).

**Table 1: TP identifier naming convention scheme**

| | | | |
|---|---|---|---|
| Identifier: | | **<suite_id>_<group>_<nn>** | |
| <suite_id> | = | layer + type of IUT: | "**L3CC**" for **L**ayer **3** **C**all **C**ontrol Protocol |
| <group> | = | group number (3 digits): | 1st digit 1 Call establishment; 2 Call Status Change; 3 Call clearing<br>2nd digit 1 Initiator; 2 Responder<br>3rd digit 1 Valid; 2 Invalid; 3 Inopportune |
| <nn> | = | sequential number: | (01-99) |

### 5.1.2 Source of TP definition

The TPs are based on EN 302 092-1 [1].



### 5.1.3 TP Structure

Each TP has been written in a manner which is consistent with all other TPs. The intention of this is to make the TPs more readable and checkable. A particular structure has been used and this is illustrated in table 2. This table should be read in conjunction with any TP, i.e. use a TP as an example to fully understand the table.



**Table 2: Structure of a single TP**

| TP part | Text | Example |
|---|---|---|
| Header | <Identifier> *tab*<br><paragraph number in base EN> *tab* | see table 1<br>subclause 0.0.0 |
| Stimulus | Ensure that the IUT in the<br><call control state><br><trigger> *see below for message structure*<br>*or* <goal> | <br>CC1, CC2, etc.<br>receiving a XXXX message<br>to request a ... |
| Reaction | <action><br><conditions><br>*if the action is sending*<br>*see below for message structure*<br><next action>, *etc.* | sends, saves, does, etc.<br>using ???, ... |
| APDU structure | <APDU type><br>APDU containing a<br><field name><br>encoded as *or* including<br><coding of field a>, <coding of field b> | callEstablish invoke, callRelease returnResult….<br><br>callSegmentId, callDescription… |
| NOTE: | Text in italics will not appear in TPs and text between <> is filled in for each TP and may differ from one TP to the next. | |

### 5.1.4 Test strategy

As the base standard EN 302 092-1 [1] contains no explicit requirements for testing, the TPs were generated as a result of an analysis of the base standard and the PICS specification EN 302 092-2 [2]. The criteria applied include the following:

- only the requirements from the point of view of the $Q_B$, $S_B$, $T_B$ and co-incident $S_B/T_B$ reference points are considered;
- whether or not a test case can be built from the TP is not considered.

The TPs are only based on conformance requirements related to the externally observable behaviour of the IUT, and are limited to conceivable situations to which a real implementation is likely to be faced (ETS 300 406 [5]).

### 5.1.5 Test of call states

It is not possible to test the final call states because no procedures are defined for this.

## 5.2 TPs for the call control (CC) entity

All PICS items referred to in this subclause are as specified in EN 302 092-2 [2] unless indicated otherwise by another numbered reference.

Unless specified:

- the APDUs indicated are valid and contain at least the mandatory fields and possibly optional ones;
- the fields indicated are valid and contain at least the mandatory contents and possibly optional ones.



### 5.2.1 Call Establishment



#### 5.2.1.1 Preceding CC entity

##### 5.2.1.1.1 Valid

**CC_111_01 subclause 9.1.1**

Ensure that the IUT in state CC0, is able to send a callEstablish invoke APDU towards the succeeding CC entity containing the parameter callSegmentId with the succeedingSideCallSegId set to the Null value and the bearerEstablishmentAddress containing the number of the terminal or network node connected to the preceding CC entity.

**Selection**: Support signalling procedures for call establishment request when acting as a preceding CC entity, PICS: MC1.

**CC_111_02 subclause 9.4.1**

Ensure that the IUT in state CC3, is able to send a callComplete invoke APDU.

**Selection:** Support signalling procedures for call acceptance when acting as a preceding CC entity. PICS: MC9.