SLOVENSKI STANDARD
SIST EN 1716:1999

01-julij-1999

Cevni sistemi iz polimernih materialovï Iztoļ ni T-kos iz polietilena (PE) ï Preskusna metoda za odpornost sestavljenega iztoļ nega T-kosa na udarce

Plastics piping systems - Polyethylene (PE) tapping tees - Test method for impact resistance of an assembled tapping tee

Kunststoff-Rohrleitungssysteme - Anbohr-T-Stücke aus Polyethylen (PE) - Prüfverfahren für die Widerstandsfähigkeit gegen Schlagbeanspruchung eines montierten Anbohr-T-Stücks

Systemes de canalisations en plastiques - Prises de branchement en polyéthylene (PE) - Méthode d'essai pour la résistance au choc d'une prise de branchement assemblée

Ta slovenski standard je istoveten z: EN 1716:1997

ICS:

23.040.45	Fitingi iz polimernih materialov	Plastics fittings

SIST EN 1716:1999 **en**

EUROPEAN STANDARD

NORME EUROPÉENNE

EUROPÄISCHE NORM

EN 1716

January 1997

ICS 23.040.45

Descriptors: plastic tubes, fluid pipelines, polyethylene, junctions, impact tests, determination, shock resistance

English version

Plastics piping systems - Polyethylene (PE) tapping tees - Test method for impact resistance of an assembled tapping tee

Systèmes de canalisations en plastiques - Prises de branchement en polyéthylène (PE) - Méthode d'essai pour la résistance au choc d'une prise de branchement assemblée

Kunststoff-Rohrleitungssysteme - Anbohr-T-Stücke aus Polyethylen (PE) - Prüfverfahren für die Widerstandsfähigkeit gegen Schlagbeanspruchung eines montierten Anbohr-T-Stücks

This European Standard was approved by CEN on 1996-09-02. CEN members are bound to comply with the CEN/CENELEC Internal Regulations which stipulate the conditions for giving this European Standard the status of a national standard without any alteration.

Up-to-date lists and bibliographical references concerning such national standards may be obtained on application to the Central Secretariat or to any CEN member.

The European Standards exist in three official versions (English, French, German). A version in any other language made by translation under the responsibility of a CEN member into its own language and notified to the Central Secretariat has the same status as the official versions.

CEN members are the national standards bodies of Austria, Belgium, Denmark, Finland, France, Germany, Greece, Iceland, Ireland, Italy, Luxembourg, Netherlands, Norway, Portugal, Spain, Sweden, Switzerland and United Kingdom.

CEN

European Committee for Standardization
Comité Européen de Normalisation
Europäisches Komitee für Normung

Central Secretariat: rue de Stassart,36 B-1050 Brussels

Foreword

This European Standard has been prepared by Technical Committee CEN/TC 155 "Plastics piping systems and ducting systems", the secretariat of which is held by NNI.

This European Standard shall be given the status of a national standard, either by publication of an identical text or by endorsement, at the latest by July 1997, and conflicting national standards shall be withdrawn at the latest by July 1997.

The material-dependent parameters and/or performance requirements are incorporated in the System Standard(s) concerned.

This standard is one of a series of standards on test methods which support System Standards for plastics piping systems and ducting systems.

According to the CEN/CENELEC Internal Regulations, the national standards organizations of the following countries are bound to implement this European Standard: Austria, Belgium, Denmark, Finland, France, Germany, Greece, Iceland, Ireland, Italy, Luxembourg, Netherlands, Norway, Portugal, Spain, Sweden, Switzerland and the United Kingdom.

1 Scope

This standard specifies a test method for the resistance to impact of polyethylene (PE) tapping tees.

This standard is applicable to PE tapping tees intended for the transport of fluids.

2 Normative references

This Standard incorporates by dated or undated reference, provisions from other publications. These normative references are cited at the appropriate places in the text and the publications are listed hereafter.
For dated references, subsequent amendments to or revisions of any of these publications apply to this Standard only when incorporated in it by amendment or revision.
For undated references the latest edition of the publication referred to applies.

EN 744:1995 *Plastics piping and ducting systems - Thermoplastics pipes - Test method for resistance to external blows by the round-the-clock method*

3 Principle

The cap of the tapping tee is subjected to an impact by means of a weight falling from a constant height, parallel to the axis of the pipe onto which the tapping tee is fused.

After two impacts from opposite directions parallel to the main axis of the pipe, the tee is inspected for visible damage and for loss of airtightness.

The test is carried out at (0 ± 2) °C unless otherwise specified in the referring standard.

NOTE: It is assumed that the following test parameters are set by the standard making reference to this standard:

a) the sampling requirements (see 5.1);
b) the number of test pieces (see 5.3);
c) if applicable, the conditioning temperature (see clause 6).

4 Apparatus

4.1 A falling weight testing machine, incorporating the following basic components:

a) main frame, with guide rails or a guiding tube fixed in the vertical position to accommodate a striker and means to release it to fall vertically and freely. When calibrated, the speed of the striker at the moment of hitting the tapping tee shall be not less than 95 % of the theoretical speed;

b) striker, conforming to EN 744, but having a special nose consisting of a cylinder with a diameter of (50 ± 2) mm and having a mass of (2500 ± 20) g.

4.2 A rigid support, with a steel mandrel capable of maintaining the test piece in the position shown in figure 1, and means capable of preventing any rotation of the test piece during the test.

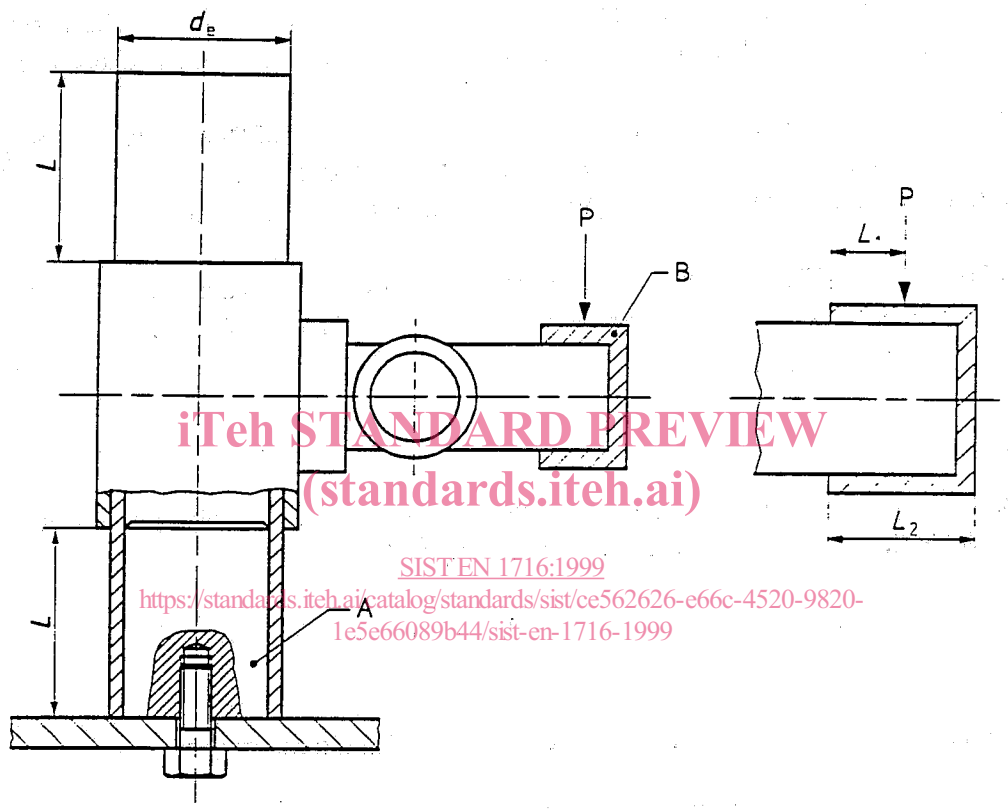

$L = d_e$
$L_1 = 0{,}5\ L_2$

A Steel mandrel
B End cap
P Point of impact

Figure 1

5 Test pieces

5.1 Sampling

The sampling requirements shall be as specified in the referring standard.

5.2 Preparation of test pieces

The test pieces shall comprise a complete assembly of a pipe, a tapping tee and an end cap. The length of the pipe shall be such that L equals d_e (see figure 1).

All joints shall be assembled in accordance with the tapping tee manufacturer's instructions.

5.3 Number of test pieces

The number of test pieces shall be as specified in the referring standard.

6 Conditioning

At least 24 h after the tapping tee has been assembled, the test piece shall be conditioned at (0 ± 2) °C, unless otherwise specified by the referring standard, for 4 h in air or 2 h in a liquid bath.

7 Procedure

7.1 Condition the test piece in accordance with clause 6 and ensure that the striker will fall through the specified height (see 7.3) before removing the test piece from conditioning. Proceed immediately to 7.2.

7.2 Within 30 s of removal from conditioning, slip the test piece over the mandrel as shown in figure 1 and strike the test piece in accordance with 7.3 or 7.5, as applicable.

7.3 Drop a striker (4.1) on to the cap of the tapping tee from a height of (2000 ± 10) mm along an axis parallel to that of the pipe onto which the tapping tee is assembled. The point of impact, P, on the end cap shall be situated as shown in figure 1.

7.4 Invert the assembly in order to hit the opposite side of the cap.

7.5 After reconditioning under the same conditions, repeat the procedure of 7.2 and 7.3 to strike the cap on the opposite side of the stem of the tapping tee.

7.6 Examine the joint visually, without magnification, and record any crack or rupture, along with its position and its extent.

7.7 Using a liquid as an external leak detector, test the airtightness of the test piece at 25 mbar at an ambient temperature of (23 ± 2)°C. Record any evidence of leakage.

8 Test report

The test report shall include the following information:

a) the reference to this standard and to the referring standard;

b) the complete identification of the sample, including the type of material and the nominal dimensions of the pipe and of the tapping tees;

c) the test temperature;

d) the mass of the falling weight;

e) the drop height;

f) the number of test pieces tested;

g) any type of failure and/or evidence of leakage;

h) any factors which may have affected the results, such as any incidents or any operating details not specified in this standard;

i) the date of test.