This document is not an ASTM standard and is intended only to provide the user of an ASTM standard an indication of what changes have been made to the previous version. Because it may not be technically possible to adequately depict all changes accurately, ASTM recommends that users consult prior editions as appropriate. In all cases only the current version of the standard as published by ASTM is to be considered the official document.

~~Designation:E1290–07ε1~~ Designation: E 1290 – 08

Standard Test Method for Crack-Tip Opening Displacement (CTOD) Fracture Toughness Measurement[1]

This standard is issued under the fixed designation E 1290; the number immediately following the designation indicates the year of original adoption or, in the case of revision, the year of last revision. A number in parentheses indicates the year of last reapproval. A superscript epsilon (ε) indicates an editorial change since the last revision or reapproval.

~~ε[1] NOTE—Editorial changes made throughout in November 2007.~~

1. Scope

1.1 This test method covers the determination of critical crack-tip opening displacement (CTOD) values at one or more of several crack extension ~~events. These CTOD values can~~ events, and may be used ~~as measures of fracture~~ to measure cleavage crack initiation toughness for ~~metallic materials, and are especially appropriate to~~ materials that exhibit a change from ductile to brittle behavior with decreasing temperature, such as ferritic steels. This test method applies specifically to notched specimens sharpened by fatigue cracking. The recommended specimens are three-point bend [SE(B)], compact [C(T)], or arc-shaped bend [A(B)] specimens. The loading rate is slow and influences of environment (other than temperature) are not covered. The specimens are tested under crosshead or clip gage displacement controlled loading.

1.1.1 The recommended specimen thickness, *B*, for the SE(B) and C(T) specimens is that of the material in thicknesses intended for an application. For the A(B) specimen, the recommended depth, *W*, is the wall thickness of the tube or pipe from which the specimen is obtained. Superficial surface machining may be used when desired.

1.1.2 For the recommended three-point bend specimens [SE(B)], width, *W*, is either equal to, or twice, the specimen thickness, *B*, depending upon the application of the test. (See 4.3 for applications of the recommended specimens.) For SE(B) specimens the recommended initial normalized crack size is $0.45 \leq a_o/W \leq 0.70$. The span-to-width ratio (*S*/*W*) is specified as 4.

1.1.3 For the recommended compact specimen [C(T)] the initial normalized crack size is $0.45 \leq a_o/W \leq 0.70$. The half-height-to-width ratio (*H*/*W*) equals 0.6 and the width to thickness ratio *W*/ *B* is specified to be 2.

1.1.4 For the recommended arc-shaped bend [A(B)] specimen, *B* is one-half the specimen depth, *W*. The initial normalized crack size is $0.45 < a_o/W < 0.70$. The span to width ratio, *S*/*W*, may be either 3 or 4 depending on the ratio of the inner to outer tube radius. For an inner radius, r_1, to an outer radius, r_2, ratio of > 0.6 to 1.0, a span to width ratio, *S*/*W*, of 4 may be used. For r_1/r_2 *ratios from 0.4 to 0.6, an S/W of 3 may be used.*

~~1.2~~

1.2 The values stated in SI units are to be regarded as the standard. The values given in parentheses are for information only.

1.3 *This standard does not purport to address all of the safety concerns, if any, associated with its use. It is the responsibility of the user of this standard to establish appropriate safety and health practices and determine the applicability of regulatory limitations prior to use.*

2. Referenced Documents

2.1 *ASTM Standards:* [2]

E 4 Practices for Force Verification of Testing Machines

E~~8~~ 8/E 8M Test Methods for Tension Testing of Metallic Materials

E 399 Test Method for Linear-Elastic Plane-Strain Fracture Toughness K_{Ic} of Metallic Materials

E 1820 Test Method for Measurement of Fracture Toughness

~~E1823 Terminology Relating to Fatigue and Fracture Testing~~ 1823 Terminology Relating to Fatigue and Fracture Testing

E 1921 Test Method for Determination of Reference Temperature, T_o, for Ferritic Steels in the Transition Range

3. Terminology

3.1 Terminology E 1823 is applicable to this test method.

---

[1] This test method is under the jurisdiction of ASTM Committee E08 on Fatigue and Fracture and is the direct responsibility of Subcommittee E08.07 on Fracture Mechanics.

~~Current edition approved July 15, 2007. Published August 2007. Originally published in 1989. Last previous edition published in 2002 as E1290–02~~

Current edition approved April 1, 2008. Published July 2008. Originally published in 1989. Last previous edition published in 2007 as E 1290 – 07ε1 .

[2] For referenced ASTM standards, visit the ASTM website, www.astm.org, or contact ASTM Customer Service at service@astm.org. For *Annual Book of ASTM Standards* volume information, refer to the standard's Document Summary page on the ASTM website.

Copyright © ASTM International, 100 Barr Harbor Drive, PO Box C700, West Conshohocken, PA 19428-2959, United States.

3.2 *Definitions:*

3.2.1 ~~*crack tip opening displacement, (CTOD),* δ[~~ *crack-tip opening displacement, (CTOD),* δ[*L*]—the crack displacement ~~due to elastic and plastic~~ resulting from the total deformation (elastic plus plastic) at variously defined locations near the original (prior to an application of force) crack tip.

3.2.1.1 *Discussion*~~—In this test method, CTOD is the displacement of the crack surfaces normal to the original (unloaded) crack plane at the tip of the fatigue precrack,~~ *—In common practice,* δ *is estimated for Mode I by inference from observations of crack displacement nearby or away, or both for the crack tip. In this test method, CTOD is the displacement of the crack surfaces normal to the original (unloaded) crack plane at the tip of the fatigue precrack,* a_o.

In CTOD testing, δ_c[L] is the value of CTOD at the onset of unstable brittle crack extension (see ~~3.2.13~~3.2.12) or pop-in (see ~~3.2.7~~3.2.6) when Δa_p< 0.2 mm (0.008 in.). The force P_c and the clip gage displacement v_c, for δ_c are indicated in Fig. 1.

In CTOD testing, δ_u[L] is the value of CTOD at the onset of unstable brittle crack extension (see ~~3.2.13~~3.2.12) or pop-in (see ~~3.2.7~~3.2.6) when the event is preceded by Δa_p> 0.2 mm (0.008 in.). The force P_u and the clip gage displacement v_u, for δ_u are indicated in Fig. 1.

In CTOD testing δ_{eot} [L] is the value of CTOD at the end-of-test for stable ductile crack extension. The corresponding force P_{eot} and clip gage displacement v_{eot} for δ_{eot} are indicated in Fig. 1.

3.2.2 *effective yield strength,* $\sigma_Y[FL^{-2}]$—an assumed value of uniaxial yield strength that represents the influence of plastic yielding upon fracture test parameters.

3.2.2.1 *Discussion*—The calculation of σ_Y is the average of the 0.2 % offset yield strength (σ_{YS}), and the tensile strength (σ_{TS}), that is $(\sigma_{YS} + \sigma_{TS})/2$. Both σ_{YS} and σ_{TS} ~~are determined in accordance with Test Methods E8.~~ are determined in accordance with Test Methods E 8/E 8M. In estimating σ_Y, influences of the testing conditions, such as loading rate and temperature, should be considered.

3.2.3 ~~*original crack size,* $a_{original\ ligament,\ b_o}$~~[*L*]~~—see Terminology E1823.~~

~~3.2.4*original uncracked ligament,* b_o[*L*]~~—the distance from the original crack front to the back surface of the specimen at the start of testing, $b_o = W - a_o$.

~~3.2.5~~

3.2.4 *physical crack extension,* Δa_p[*L*]—an increase in physical crack size, $\Delta a_p = a_p - a_o$.

iTeh Standards
(https://standards.iteh.ai)
Document Preview
ASTM E1290-08
https://standards.iteh.ai/catalog/standards/sist/7ad8f7ad-1af3-4ec1-b7f9-467c1dac60fe/astm-e1290-08

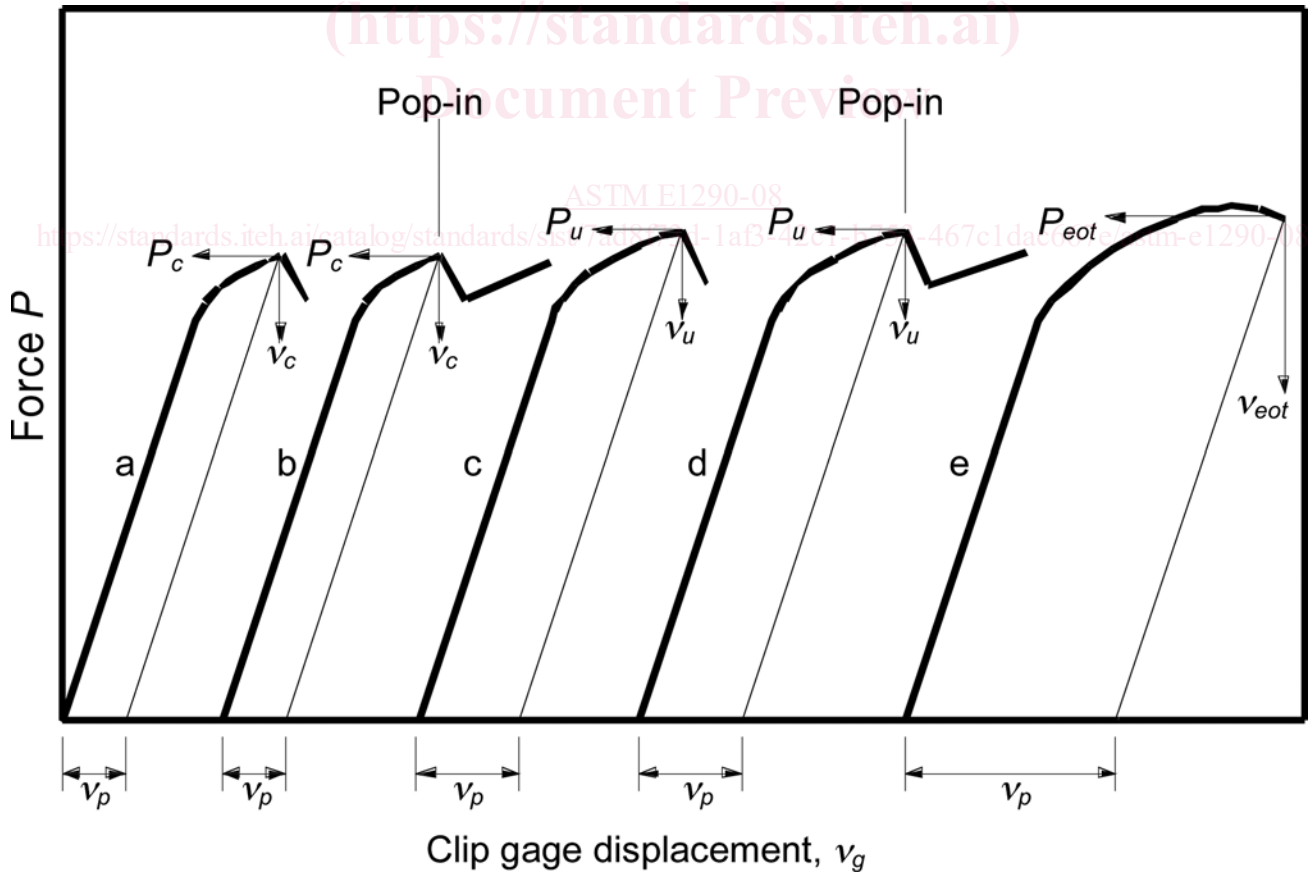

NOTE 1—Construction lines drawn parallel to the elastic loading slope to give v_p, the plastic component of total displacement, v_g.
NOTE 2—In curves b and d, the behavior after pop-in is a function of machine/specimen compliance, instrument response, etc.

FIG. 1 Types of Force Versus Clip Gage Displacement Records

~~3.2.6~~

3.2.5 *physical crack size, a_p[L]*—see Terminology E 1823.

~~3.2.6.1~~

3.2.5.1 *Discussion*—In CTOD testing, $a_p = a_o + \Delta a_p$. This test method uses a 9–point method (see 8.9.5) to measure a_p.

~~3.2.7~~3.2.6 *pop-in*—a discontinuity in the force versus clip gage displacement record. ~~The record of a pop-in shows~~ This discontinuity is characterized by a sudden increase in displacement and, generally, a decrease in force. Subsequently, the displacement and force increase to above their respective values at pop-in.

~~3.2.8~~3.2.7 *slow stable crack extension [L]*—a displacement controlled crack extension beyond the stretch zone width (see ~~3.2.12~~3.2.11). The extension stops when the applied displacement is held constant.

~~3.2.9~~

3.2.8 *specimen span, S [L]*~~—the distance between specimen supports in a bend specimen.~~

~~3.2.10~~—*the distance between specimen supports.*

3.2.9 *specimen thickness, B[L]*—see Terminology E 1823.

~~3.2.11~~

3.2.10 *specimen width, W [L]*—see Terminology E 1823.

~~3.2.12 *stretch zone width, SZW [*~~*3.2.11 stretch zone width, (SZW)[L]*—the length of crack extension that occurs during crack-tip blunting, for example, prior to the onset of unstable brittle crack extension, pop-in, or slow stable crack extension. The SZW is ~~in the same plane as~~ co-planar with the original (unloaded) fatigue precrack and refers to an extension ~~beyond~~of the original ~~crack size.~~ crack.

~~3.2.13~~3.2.12 *unstable brittle crack extension [L]*—an abrupt crack extension ~~that occurs~~ occurring with or without prior stable crack extension in a standard fracture test specimen under crosshead or clip gage displacement control.

4. Summary of Test Method

4.1 The objective of the test is to determine the value of CTOD at one of the following crack extension events. The values of CTOD may correspond to: δ_c, the onset of unstable brittle crack extension with no significant prior slow stable crack extension (see 3.2.1)~~, or $\delta_{j,\ \delta_u}$, *the onset of unstable brittle crack extension following prior slow stable crack extension.*~~, *the onset of unstable brittle crack extension following prior slow stable crack extension, or* δ_{eot}, *the CTOD value at the end-of-test test with only slow stable crack extension.*

4.2 The test method involves crosshead or clip gage displacement controlled three-point bend loading or pin loading of fatigue precracked specimens. Force versus clip gage crack opening displacement is recorded, for example, Fig. 1. The forces and displacements corresponding to the specific events in the crack initiation and extension process are used to determine the corresponding CTOD values. For values of δ_c ~~and $\delta_{,\ \delta_u}$~~ *and* δ_{eot}, *the corresponding force and clip gage displacements are obtained directly from the test records.*

4.3 The rectangular section bend specimen and the compact specimen are intended to maximize constraint and these are generally recommended for those through-thickness crack types and orientations for which such geometries are feasible. For the evaluation of surface cracks in structural applications for example, orientations T-S or L-S (Terminology E 1823), the square section bend specimen is recommended. Also for certain situations in curved geometry source material or welded joints, the square section bend specimen may be preferred. Square section bend specimens may be necessary in order to sample an acceptable volume of a discrete microstructure.

4.4 The arc-shaped bend specimen permits toughness testing in the C-R orientation (Terminology E 1823), for pipe or tube. This orientation is of interest since pipes and tubes under pressure often fail with longitudinal cracks. The specimen geometry is convenient for obtaining samples with minimal use of material.

5. Significance and Use

5.1 This test method characterizes the fracture toughness of materials through the determination of crack-tip opening displacement (CTOD) at one of ~~two~~three events: (a) onset of unstable crack extension without significant prior stable crack extension, or (b) onset of unstable crack extension with significant prior stable crack extension, or (c) the end-of-test after significant slow stable crack extension. This test method may also be used to characterize the toughness of materials for which the properties and thickness of interest preclude the determination of K_{Ic} fracture toughness in accordance with Test Method E 399.

5.2 The different values of CTOD determined by this test method can be used to characterize the resistance of a material to crack initiation and early crack extension at a given temperature.

5.3 The values of CTOD may be affected by specimen dimensions. It has been shown that values of CTOD determined on SE(B) specimens using the square section geometry may not be the same as those using the rectangular section geometry, and may differ from those obtained with either the ~~(C)T~~C(T) or ~~(A)B~~A(B) specimens.

5.4 The values of CTOD determined by this test method may serve the following purposes:

5.4.1 In research and development, CTOD testing can show the effects of certain parameters on the fracture toughness of metallic materials significant to service performance. These parameters include material composition, thermo-mechanical processing, welding, and thermal stress relief.

iTeh Standards (https://standards.iteh.ai) Document Preview ASTM E1290-08

~~5.4.2For specifications of acceptance and manufacturing quality control of base materials, weld metals, and weld heat affected zones.~~

~~5.4.3For inspection and flaw assessment criteria, when used in conjunction with fracture mechanics analyses. Awareness of differences that may exist between laboratory test and field conditions is required to make proper flaw assessment (see~~

5.4.2 CTOD testing may be used in specifications of acceptance and manufacturing quality control of base materials, weld metals, and weld heat affected zones. Previous versions of Test Method E 1290 made effective use of the value of CTOD at the first attainment of a maximum force plateau for such purposes. Qualitative comparisons of this type can only be made if a consistent specimen geometry is used and the materials compared have similar constitutive properties. The value of CTOD at the first attainment of a maximum force plateau was removed from this test method because is was not associated with a measurement of crack extension and therefore cannot be considered a measurement of fracture toughness. The δ_{eot} value may be used in place of the value of CTOD at the first attainment of a maximum force plateau for quality control and specifications.

5.4.3 The δ_c and δ_{eot} values from CTOD testing can be used for inspection and flaw assessment criteria, when used in conjunction with other standards such as Test Methods E 1921 and E 1820 and informed fracture mechanics analyses. Awareness of differences that may exist between laboratory test and field conditions is required to make proper flaw assessment (see 4.3 and 4.4).

6. Apparatus

6.1 This procedure involves measurement of applied force, *P*, and clip gage crack opening displacement, *v*. Force versus displacement is autographically recorded on an *x-y* plotter for visual display, or converted to and recorded in digital form for subsequent processing. Testing is performed under crosshead or clip gage displacement control in a compression or tension testing machine, or both, that conforms to the requirements of Practices E 4.

6.2 *Fixturing for Three-Point Bend Specimens*—A recommended SE(B) or A(B) specimen fixture is shown in Fig. 2. Friction effects between the support rollers and specimen are reduced by allowing the rollers to rotate during the test. The use of high hardness steel of the order of 40 HRC or more is recommended for the fixture and rollers to prevent indentation of the platen surfaces.

6.3 *Tension Testing Clevis*—A loading clevis suitable for testing C(T) specimens is shown in Fig. 3. Each leg of the specimen is held by such a clevis and loaded through pins, in order to allow rotation of the specimen during testing. To provide rolling contact between the loading pins and the clevis holes, these holes are produced with small flats on the loading surfaces. Other clevis designs may be used if it can be demonstrated that they will accomplish the same result as the design shown. Clevises and pins should be fabricated from steels of sufficient strength and hardness (greater than 40 HRC) to elastically resist indentation forces. The critical tolerances and suggested proportions of the clevis and pins are given in Fig. 3. These proportions are based on specimens having $W/B = 2$ for $B > 12.7$ mm (0.5 in.) and $W/B = 4$ for $B \leq 12.7$ mm (0.5 in.). If a 1930-MPa (280 000-psi) yield strength maraging steel is used for the clevis and pins, adequate strength will be obtained. If lower strength grip material is used, or if substantially larger specimens are required at a given σ_{YS}/E ratio, then heavier grips will be required. As indicated in Fig. 3, the clevis corners may be cut off sufficiently to accommodate seating of the clip gage in specimens less than 9.5 mm (0.375 in.) thick. Attention should be given to achieving good alignment through careful machining of all auxiliary gripping fixtures.

iTeh Standards (https://standards.iteh.ai) Document Preview

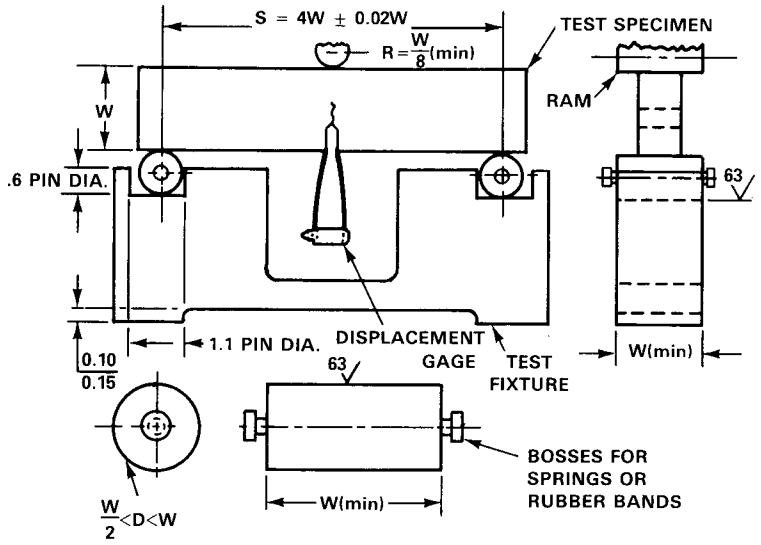

NOTE 1—Roller pins and specimen contact surface of loading ram must be parallel to each other within 0.002W.
NOTE 2— 0.10 in. = 2.54 mm; 0.15 in. = 3.81 mm.

FIG. 2 SE(B) Test Fixture Design

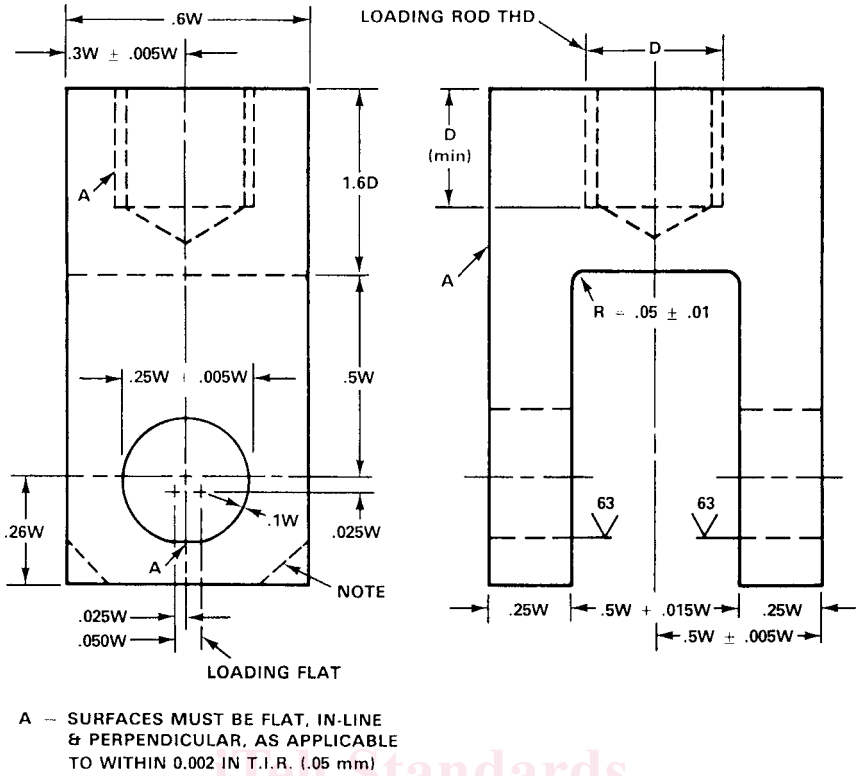

NOTE 1—Corners of the clevis may be removed as necessary to accommodate the clip gage.

FIG. 3 Clevis for C(T) Specimen Testing

iTeh Standards (https://standards.iteh.ai) Document Preview

6.4 *Displacement Measuring Devices* :

6.4.1 Displacement measuring gages are used to measure opening displacements on SE(B) specimens at either knife edges a distance z beyond the crack mouth, Fig. 4a, or at the crack mouth ($z = 0$) in the case of integral knife edges, Fig. 4b. For C(T) specimens, where the opening displacement is not measured on the load line, the difference between the load line and the displacement measuring point shall constitute the dimension z (see 9.2). Alternatively, when the opening displacements on C(T) specimens are made on or within ± 0.002 W of the load line, it may be assumed that $z = 0$. For A(B) specimens, special measurements must be taken to establish location of the clip gage knife edges with respect to the crack plane. Paragaphs 8.9.4 and 8.9.5 provide more detail on required measurements.

6.4.2 The clip gage recommended in Test Method E 399 may be used in cases where the total expected displacement is 2.5 mm (0.1 in.) or less. Sensitivity and linearity requirements specified in Test Method E 399, shall be met over the full working range of the gage. In addition, the gage is to be calibrated to within ± 1 % of the working range.

6.4.3 For cases where a linear working range of up to 8 mm (0.3 in.) or more is needed, an enlarged gage such as that shown in Fig. 5 can be used. Both linearity and accuracy of the equipment or system used shall be demonstrated to be within ±1 % of the working range of the equipment.

6.4.4 The seating between the clip gage and knife edges shall be firm and free from friction drag.

6.5 *Force Measurement*—The sensitivity of the force sensing device shall be sufficient to avoid distortion caused by over amplification and the device shall have linearity identical to that for the displacement signal. The combination of force sensing device and recording system shall permit the force P to be determined from the test record within an accuracy of ±1 %.

7. Specimen Configurations, Dimensions, and Preparation

7.1 The SE(B) specimens, shown in Fig. 6 and Fig. 7, are tested with a span to width ratio, S/W , of 4. Therefore, it is suggested that overall specimen length should be at least 4.5 W.

7.1.1 The standard bend specimens shall be of thickness, B, at least equal to that employed in the specific structural application of interest, or the original product form thickness. The specimen should be one of the types shown in Fig. 6 and Fig. 7.

7.1.2 The recommended original crack size, a_o, of the SE(B) specimen shall be within the range $0.45\ W \leq a_o \leq 0.70\ W$.

7.1.3 In order to machine fatigue crack-starter notches to depths greater than 2.5 mm (0.1 in.), a stepped width notch is an allowed exception. This is acceptable, provided that: (a) the stepped width notch falls completely within the envelope shown in Fig. 8, and, (b) the length of the fatigue precrack extension from the machined notch tip satisfies the requirement of 7.4.2. Separate or integral knife edges for accommodating clip gages are shown in Fig. 4.

7.2 The recommended C(T) specimen designs are shown in Fig. 9. These are similar to the configurations recommended in Test

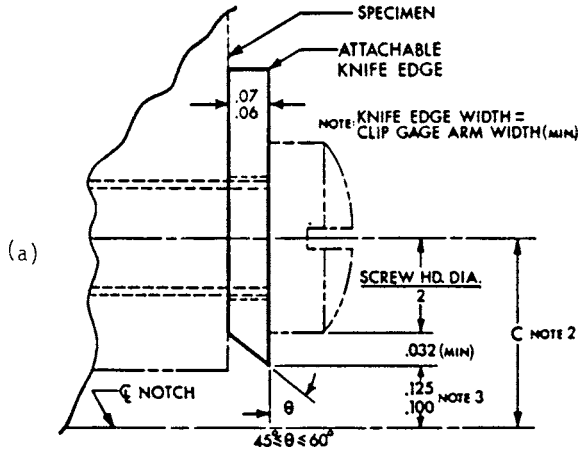

NOTE 1—Dimensions are in inches.

NOTE 2—Effective gage length = 2*C* + Screw Thread Diameter ≤ *W*/2. (This will always be greater than the gage length specified in Test Method E 399, A 1.1.)

NOTE 3—Dimension shown corresponds to clip gage spacer block dimension in Test Method E 399, Annex A1 .

Metric Equivalents					
in.	0.032	0.06	0.07	0.100	0.125
mm	0.81	1.5	1.8	2.54	3.18

iTeh Standards
(https://standards.iteh.ai)
Document Preview

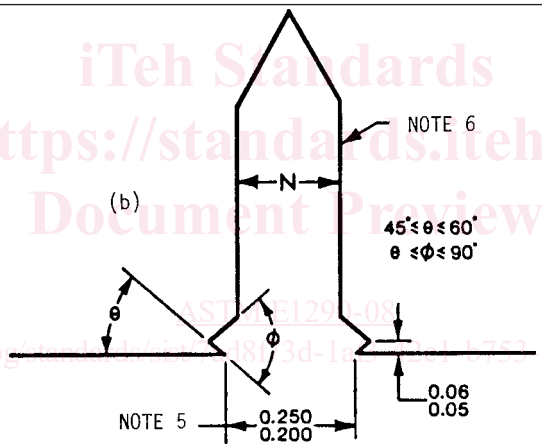

https://standards.iteh.ai/catalog/standards/sist/...-astm-e1290-08

NOTE 4—Dimensions in inches.

NOTE 5—Gage length shown corresponds to clip gage spacer block dimensions shown in Test Method E 399, Annex A1 , but other gage lengths may be used provided they are appropriate to the specimen.

NOTE 6—For starter notch configurations see Fig. 8

Metric Equivalents				
in.	0.050	0.060	0.200	0.250
mm	1.3	1.5	5.1	6.4

FIG. 4 Knife Edges for Location of Clip Gages

Method E 1820. The designs are suitable for use with flat bottom clevises of Test Method E 399 design (see Fig. 3). A cut-out section on the front face provides room to attach razor blade edges on the load line of the specimen. The sharp edges of the blades shall be square with respect to specimen surfaces and parallel within 0.5°. A specially prepared spacer block can be used to achieve these requirements.

7.2.1 The C(T) specimen shall be of thickness, *B*, at least equal to that employed in the specific structural application of interest, or the original product form thickness.

7.2.2 The C(T) specimen half-height to width ratio *H/W* is 0.6, and the width *W* to thickness *B* ratio *W/B* is specified to be 2.

7.2.3 The original crack size, a_o, of the compact specimen shall be within the range 0.45 $W \leq a_o \leq$ 0.70 *W*.