FINAL DRAFT

INTERNATIONAL STANDARD

ISO/FDIS 13041-2

ISO/TC **39**/SC **2**

Secretariat: ASI

Voting begins on:
2016-09-09

Voting terminates on:
2016-11-04

Test conditions for numerically controlled turning machines and turning centres —

Part 2: Geometric tests for machines with a vertical workholding spindle

Conditions d'essai des tours à commande numérique et des centres de tournage —

Partie 2: Essais géométriques pour les machines à broche porte-pièce verticale

iTeh Standards
(https://standards.iteh.ai)
Document Preview

ISO/FDIS 13041-2
https://standards.iteh.ai/catalog/standards/iso/d362df85-a4c3-4896-9fb7-655b6e89d892/iso-fdis-13041-2

RECIPIENTS OF THIS DRAFT ARE INVITED TO SUBMIT, WITH THEIR COMMENTS, NOTIFICATION OF ANY RELEVANT PATENT RIGHTS OF WHICH THEY ARE AWARE AND TO PROVIDE SUPPORTING DOCUMENTATION.

IN ADDITION TO THEIR EVALUATION AS BEING ACCEPTABLE FOR INDUSTRIAL, TECHNOLOGICAL, COMMERCIAL AND USER PURPOSES, DRAFT INTERNATIONAL STANDARDS MAY ON OCCASION HAVE TO BE CONSIDERED IN THE LIGHT OF THEIR POTENTIAL TO BECOME STANDARDS TO WHICH REFERENCE MAY BE MADE IN NATIONAL REGULATIONS.

Reference number
ISO/FDIS 13041-2:2016(E)

© ISO 2016

iTeh Standards
(https://standards.iteh.ai)
Document Preview

ISO/FDIS 13041-2
https://standards.iteh.ai/catalog/standards/iso/d362df85-a4c3-4896-9fb7-655b6e89d892/iso-fdis-13041-2

COPYRIGHT PROTECTED DOCUMENT

© ISO 2016, Published in Switzerland

All rights reserved. Unless otherwise specified, no part of this publication may be reproduced or utilized otherwise in any form or by any means, electronic or mechanical, including photocopying, or posting on the internet or an intranet, without prior written permission. Permission can be requested from either ISO at the address below or ISO's member body in the country of the requester.

ISO copyright office
Ch. de Blandonnet 8 • CP 401
CH-1214 Vernier, Geneva, Switzerland
Tel. +41 22 749 01 11
Fax +41 22 749 09 47
copyright@iso.org
www.iso.org

Contents

Page

Foreword ..... **iv**
Introduction ..... **v**
1 Scope **1**
2 Normative references **1**
3 Terms and definitions **1**
4 Preliminary remarks **2**
4.1 Measurement units 2
4.2 Reference to ISO 230-1 and ISO 230-7 3
4.3 Machine levelling 3
4.4 Test sequence 3
4.5 Test to be performed 3
4.6 Measuring instruments 3
4.7 Diagrams 3
4.8 Software compensation 4
4.9 Gravity influence for two railhead machines 4
4.10 Tolerances 4
4.11 Machine classifications 4
4.12 Linear motions 4
4.13 Turrets or toolholding components (element) 4
4.14 Machine configurations and designation of axes 5
5 Geometric tests **9**
5.1 Workholding spindle or table 9
5.2 Linear axes X and Z 11
5.3 Cross-rail movement 19
5.4 Test related to Y-axis 24
5.5 Tool holder(s) and turret(s) 29
5.6 Toolholding spindle(s) 31
Annex A (informative) **Tests for checking the accuracy of axes of rotation** **34**
Annex B (informative) **Terms in non-ISO languages** **40**
Bibliography **41**

iTeh Standards
(https://standards.iteh.ai)
Document Preview
ISO/FDIS 13041-2
https://standards.iteh.ai/catalog/standards/iso/d362df85-a4c3-4896-9fb7-655b6e89d892/iso-fdis-13041-2

© ISO 2016 – All rights reserved

Foreword

ISO (the International Organization for Standardization) is a worldwide federation of national standards bodies (ISO member bodies). The work of preparing International Standards is normally carried out through ISO technical committees. Each member body interested in a subject for which a technical committee has been established has the right to be represented on that committee. International organizations, governmental and non-governmental, in liaison with ISO, also take part in the work. ISO collaborates closely with the International Electrotechnical Commission (IEC) on all matters of electrotechnical standardization.

The procedures used to develop this document and those intended for its further maintenance are described in the ISO/IEC Directives, Part 1. In particular, the different approval criteria needed for the different types of ISO documents should be noted. This document was drafted in accordance with the editorial rules of the ISO/IEC Directives, Part 2 (see www.iso.org/directives).

Attention is drawn to the possibility that some of the elements of this document may be the subject of patent rights. ISO shall not be held responsible for identifying any or all such patent rights. Details of any patent rights identified during the development of the document will be in the Introduction and/or on the ISO list of patent declarations received (see www.iso.org/patents).

Any trade name used in this document is information given for the convenience of users and does not constitute an endorsement.

For an explanation on the meaning of ISO specific terms and expressions related to conformity assessment, as well as information about ISO's adherence to the World Trade Organization (WTO) principles in the Technical Barriers to Trade (TBT) see the following URL: www.iso.org/iso/foreword.html.

The committee responsible for this document is ISO/TC 39, *Machine tools*, Subcommittee SC 2, *Test conditions for metal cutting machine tools*.

This second edition cancels and replaces the first edition (ISO 13041-2:2008), which has been technically revised.

A list of all parts in the ISO series can be found on the ISO website.

iTeh Standards
(https://standards.iteh.ai)
Document Preview
ISO/FDIS 13041-2
https://standards.iteh.ai/catalog/standards/iso/d362df85-a4c3-4896-9fb7-655b6e89d892/iso-fdis-13041-2

 © ISO 2016 – All rights reserved

Introduction

A turning centre is a machine tool in which the principal movement is the rotation of the workpiece against the stationary cutting tool(s). It is a numerically controlled machine tool capable of performing multiple machining operations, including milling, turning, boring, drilling and tapping, as well as automatic tool changing from a magazine or similar storage unit in accordance with a machining program.

The objective of ISO 13041 (all parts) is to provide information as wide and comprehensive as possible on geometric, positional, contouring, thermal and machining tests which can be carried out for comparison, acceptance, maintenance or any other purpose.

ISO 13041 (all parts) specifies, with reference to ISO 230-1 and ISO 230-7, tests for turning centres and numerically controlled turning machines with/without tailstocks standing alone or integrated in flexible manufacturing systems. ISO 13041 (all parts) also establishes the tolerances or maximum acceptable values for the test results corresponding to general-purpose and normal-accuracy turning centres and numerically controlled turning machines.

iTeh Standards
(https://standards.iteh.ai)
Document Preview

ISO/FDIS 13041-2
https://standards.iteh.ai/catalog/standards/iso/d362df85-a4c3-4896-9fb7-655b6e89d892/iso-fdis-13041-2

© ISO 2016 – All rights reserved

iTeh Standards
(https://standards.iteh.ai)
Document Preview

ISO/FDIS 13041-2
https://standards.iteh.ai/catalog/standards/iso/d362df85-a4c3-4896-9fb7-655b6e89d892/iso-fdis-13041-2

Test conditions for numerically controlled turning machines and turning centres —

Part 2: Geometric tests for machines with a vertical workholding spindle

1 Scope

This document specifies, with reference to ISO 230-1 and ISO 230-7, the geometric tests for general purpose numerically controlled (NC) turning machines and turning centres with vertical workholding spindles, as well as the corresponding applicable tolerances.

This document explains different concepts or configurations and common features of NC turning machines and turning centres with vertical workholding spindles. It also provides a terminology and designation of controlled axes (see Figures 1, 2, 3, and 4).

This document deals only with the verification of the accuracy of the machine. It does not apply to the operational testing of the machine (e.g. vibration, abnormal noise, stick slip motion of components) nor to machine characteristics (e.g. speeds, feeds). Test not concerning the pure geometric accuracy of the machine are dealt with in other parts of ISO 13041.

iTeh Standards
(https://standards.iteh.ai)
Document Preview

NOTE In addition to terms used in the official ISO languages (English and French), this document gives the equivalent terms in German, Italian and Persian languages in Annex B. These are published under the responsibility of the member body/National Committee for Germany (DIN), Italy (UNI), and Iran (ISIRI) and are given for information only. Only the terms and definitions given in the official languages can be considered as ISO terms and definitions.

ISO/FDIS 13041-2
https://standards.iteh.ai/catalog/standards/iso/d362df85-a4c3-4896-9fb7-655b6e89d892/iso-fdis-13041-2

2 Normative references

The following documents are referred to in text in such a way that some or all of their content constitutes requirements of this document. For dated references, only the edition cited applies. For undated references, the latest edition of the referenced document (including any amendments) applies.

ISO 230-1:2012, *Test code for machine tools — Part 1: Geometric accuracy of machines operating under no-load or quasi-static conditions*

ISO 230-7:2015, *Test code for machine tools — Part 7: Geometric accuracy of axes of rotation*

ISO 841:2001, *Industrial automation systems and integration — Numerical control of machines — Coordinate system and motion nomenclature*

3 Terms and definitions

For the purposes of this document, the following terms and definitions apply.

ISO and IEC maintain terminological databases for use in standardization at the following addresses:

- IEC Electropedia: available at http://www.electropedia.org/
- ISO Online browsing platform: available at http://www.iso.org/obp

© ISO 2016 – All rights reserved

3.1
turning machine
machine tool in which the principal movement is the rotation of the workpiece against the stationary cutting tool(s)

3.2
numerical control
NC
computerized numerical
CNC
automatic control of a process performed by a device that makes use of numerical data introduced while the operation is in progress

[SOURCE: ISO 2806:1994, 2.1.1 and 2.1.2, modified]

3.3
numerically controlled turning machine
NC turning machine
turning machine (3.1) that operates under *numerical control* or *computerized numerical control* (3.2)

3.4
numerically controlled vertical spindle-turning machine
numerically controlled turning machine (3.3) where the workpiece is mounted on a vertical workholding spindle against the stationary cutting tool(s) and where cutting energy is brought by the workpiece and not by the tool

iTeh Standards
(https://standards.iteh.ai)
Document Preview

Note 1 to entry: This machine is controlled by numerical control (NC) providing automatic function.

Note 2 to entry: For vertical spindle-turning machines with inverted workholding spindle, i.e. with workholding device at the lower end of the spindle, see ISO 13041-3.

3.5
vertical spindle-turning centre
numerically controlled vertical spindle-turning machine (3.4) equipped with toolholding spindles and the capacity to orientate the workholding spindle around its axis

ISO/FDIS 13041-2
https://standards.iteh.ai/catalog/standards/iso/e2e2d1b3-4fc3-4896-9fb7-655b6e89d892/iso-fdis-13041-2

Note 1 to entry: Such a machine can perform several operations such as milling, tapping, drilling, and others by power driven tools nested in live spindles.

Note 2 to entry: This machine may include additional features such as automatic tool changing from a magazine or Y-axis motion.

Note 3 to entry: For vertical spindle-turning machines with inverted workholding spindle, i.e. with workholding device at the lower end of the spindle, see ISO 13041-3.

4 Preliminary remarks

4.1 Measurement units

In this document, all linear dimensions, deviations, and corresponding tolerances are expressed in millimetres; angular dimensions are expressed in degrees, and angular deviations and the corresponding tolerance are expressed in ratios; but in some cases, micro-radians or arc seconds may be used for clarification purposes. The equivalence of the following expressions should always be kept in mind.

$$0{,}010/1\,000 = 10 \times 10^{-6} = 10\ \mu\text{rad} \approx 2\ \text{in}$$

 © ISO 2016 – All rights reserved

4.2 Reference to ISO 230-1 and ISO 230-7

To apply this document, reference shall be made to ISO 230-1, especially for installation of the machine before testing, warming up of the spindle and moving components, description of measuring methods and recommended instrument uncertainty of testing equipment.

In the "Observation" block of the tests described in Clause 5, the instructions are preceded by a reference to the corresponding clause in ISO 230-1:2012 or in ISO 230-7:2015 in cases where the test concerned is in compliance with their specifications. Tolerances are given for each test (see G1 to G20, R1 and R2).

4.3 Machine levelling

Prior to conducting tests on a machine, the machine should be levelled according to the recommendations of the supplier/manufacturer (see ISO 230-1:2012, 6.1.2).

4.4 Test sequence

The sequence in which tests are presented in this document in no way defines the practical order of testing. In order to make the mounting of instruments or gauging easier, tests may be performed in any order.

4.5 Test to be performed

When testing a machine, it is not always necessary or possible to carry out all the tests described in this document. When the tests are required for acceptance purposes, it is up to the user to choose, in agreement with the supplier/manufacturer, those tests relating to the components and/or the properties of the machine which are of interest. These tests are to be clearly stated when ordering a machine. Mere reference to this document for the acceptance tests, without specifying the tests to be carried out, and without agreement on the relevant expenses, cannot be considered as binding for any contracting party (see also ISO 230-1:2012, Annex A).

iTeh Standards
(https://standards.iteh.ai)
Document Preview

4.6 Measuring instruments

ISO/FDIS 13041-2
https://standards.iteh.ai/catalog/standards/iso/d362df85-a4e3-4896-9fb7-655b6e89d892/iso-fdis-13041-2

Measuring instruments indicated in the tests described in the following sections are examples only. Other instruments capable of measuring the same quantities and having the same, or a smaller, measurement uncertainty may be used. Reference shall be made to ISO 230-1:2012, Clause 5, that indicates the relationship between measurement uncertainties and the tolerances.

When a "dial gauge" is referred to, it can mean not only dial test indicators (DTI) but any type of linear displacement sensor such as analogue or digital dial gauges, linear variable differential transformer (LVDTs), linear scale displacement gauges, or non-contact sensors, when applicable to the test concerned (see ISO 230-1:2012, Clause 4).

Similarly, when a "straightedge" is referred to, it can mean any type of straightness reference artefact, such as a granite or ceramic or steel or cast iron straightedge, one arm of a square, one generating line on a cylinder square, any straight path on a reference cube, or a special, dedicated artefact manufactured to fit in the T-slots or other references.

In the same way, when a "square" is mentioned, it can mean any type of squareness reference artefact, such as a granite or ceramic or steel or cast iron square, a cylinder square, a reference cube, or, again, a special, dedicated artefact.

4.7 Diagrams

In this document, for reasons of simplicity, the diagrams associated with geometric tests generally illustrate only one type of machine.

© ISO 2016 – All rights reserved

4.8 Software compensation

When built-in software facilities are available for compensating certain geometric deviations, their use during these tests for acceptance purposes shall be based on an agreement between the user and the manufacturer/supplier, with due consideration of the machine tool intended use. When software compensation is used, this shall be stated in the test report. It shall be noted that when software compensation is used, axes shall not be locked for test purposes (see ISO/TR 16907).

4.9 Gravity influence for two railhead machines

For machine tools provided with two slides on the cross rail [see Figures 2 a) and b) and Figure 4], the railhead not under test shall be in a defined park position according to the manufacturer's recommendation. If both railheads are used, the deviations may change due to gravity influences.

4.10 Tolerances

In this document, all tolerance values (see in ISO 230-1:2012, 4.1) are guidelines. When they are used for acceptance purposes, other values can be agreed upon between the user and the manufacturer/supplier. The required/agreed tolerance values are to be clearly stated when ordering the machine.

When the tolerance for a geometric test is established for a measuring length different from that given in this document (see ISO 230-1:2012, 4.1), it shall be taken into consideration that the minimum value of tolerance is 0,005 mm.

4.11 Machine classifications

iTeh Standards
(https://standards.iteh.ai)
Document Preview

The machines considered in this document are divided into the following basic configurations:

— Type A: single-column machines (Figure 1); related nomenclature is given in Table 1 and Figure 3.

— Type B: double-column machines (Figure 2); related nomenclature is given in Table 2 and Figure 4.

Type B machine configurations are further classified into the following types:

ISO/FDIS 13041-2:2016
https://standards.iteh.ai/catalog/standards/iso/d362df85-a4c3-4896-9fb7-655b6e89d892/iso-fdis-13041-2

— fixed columns — portal type;

— moving columns — gantry type.

4.12 Linear motions

For simplicity, all the machine examples shown in Figures 1 and 2 use the axis designation of a letter and a number (e.g. X, X1, X2,...) as defined in ISO 841:2001, 6.1. In all examples, the use of the letters U, V, or W could be substituted.

4.13 Turrets or toolholding components (element)

Depending on the machine configuration, cutting tools (stationary or power driven) can be clamped in a tool holder or in a turret located on the railhead ram and/or the side head ram and/or the turret. An automatic tool change device can also be used. However, this document does not provide any test methods for automatic tool change operations.

 © ISO 2016 – All rights reserved

4.14 Machine configurations and designation of axes

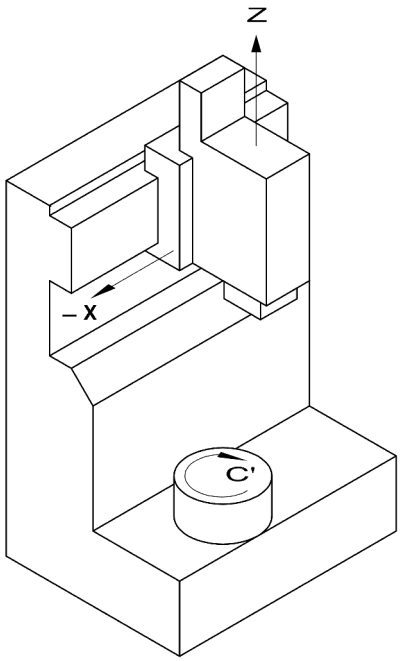

a) Compound head type
[t Z X b C' w]

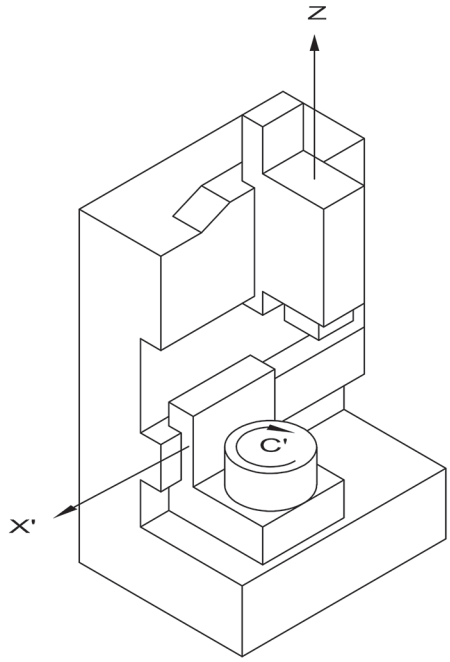

b) Shared motion (moving workholding spindle) type
[t Z b X' C' w]

iTeh Standards
(https://standards.iteh.ai)
Document Preview
ISO/FDIS 13041-2
https://standards.iteh.ai/catalog/standards/iso/1362df85-a4c3-4896-9f[illegible]-655b6e89[illegible]/iso-fdis-13041-2

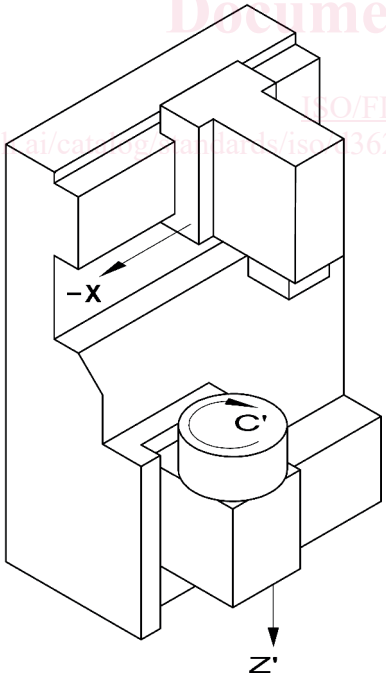

c) Shared motion (moving head/saddle) type
[t X b Z' C' w]

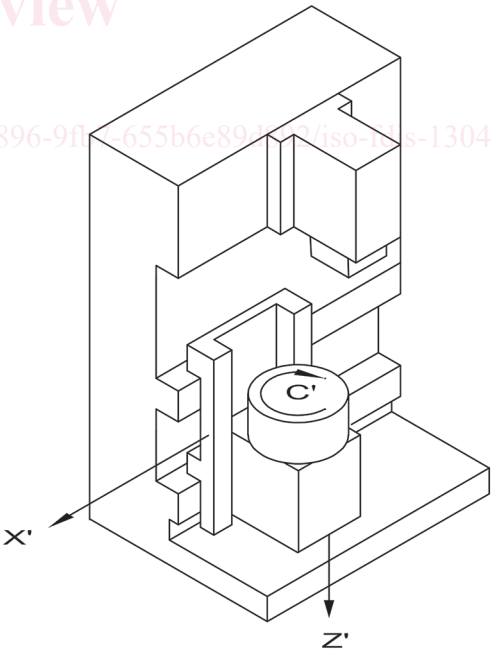

d) Compound workholding spindle type
[t b X' Z' C' w]

Figure 1 — Examples of machine configurations: Single-column machines (Type A)

© ISO 2016 – All rights reserved

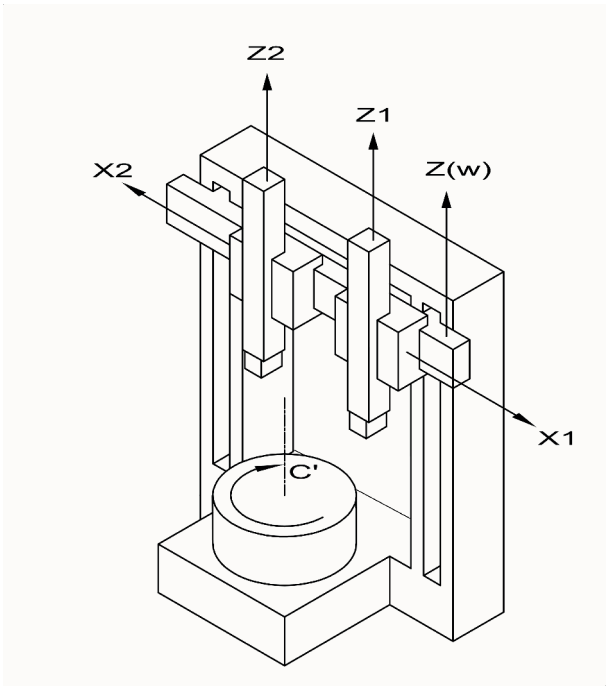

a) Fixed column, moving cross-rail
[t_1 Z1 X1 Z b C' w]
[t_2 Z2 X2 Z b C' w]

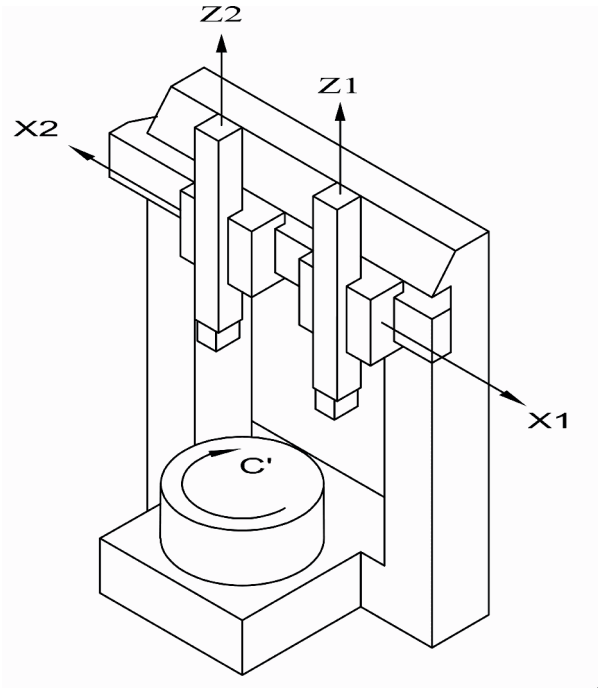

b) Fixed column, fixed cross-rail
[t_1 Z1 X1 b C' w]
[t_2 Z2 X2 b C' w]

iTeh Standards
(https://standards.iteh.ai)
Document Preview
ISO/FDIS 13041-2
https://standards.iteh.ai/catalog/standards/iso/d362df85-a4c3-4899-9fb7-6f5b6e89d892/iso-fdis-13041-2

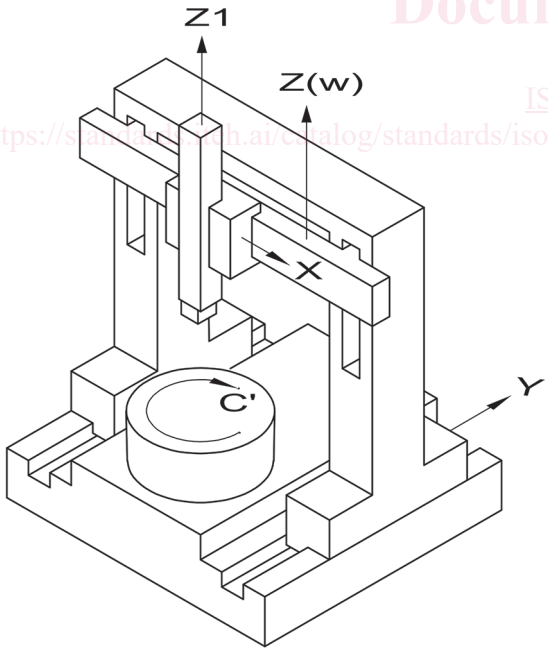

c) Moving column (gantry type), moving cross-rail
[t Z1 X Z Y b C' w]

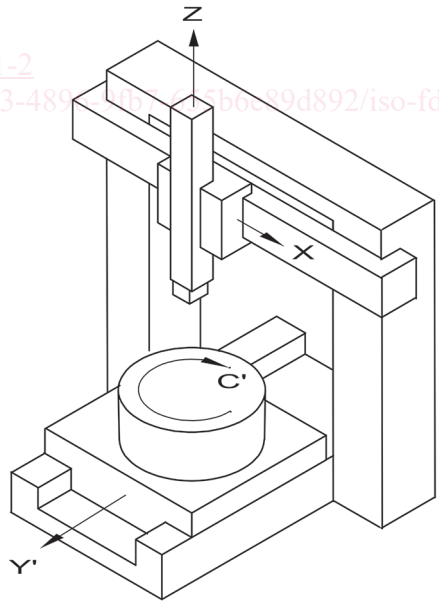

d) Fixed column (portal type), moving workholding spindle (Y-axis)
[t Z X b Y' C' w]

Figure 2 — Examples of machine configurations: Double-column machines (Type B)

© ISO 2016 – All rights reserved