INTERNATIONAL STANDARD

ISO 104

Fourth edition
2015-09-15

Rolling bearings — Thrust bearings — Boundary dimensions, general plan

Roulements — Butées — Dimensions d'encombrement, plan général

Reference number
ISO 104:2015(E)

ISO copyright office
Ch. de Blandonnet 8 • CP 401
CH-1214 Vernier, Geneva, Switzerland
Tel. +41 22 749 01 11
Fax +41 22 749 09 47
copyright@iso.org
www.iso.org

Contents

Page

Foreword

ISO (the International Organization for Standardization) is a worldwide federation of national standards bodies (ISO member bodies). The work of preparing International Standards is normally carried out through ISO technical committees. Each member body interested in a subject for which a technical committee has been established has the right to be represented on that committee. International organizations, governmental and non-governmental, in liaison with ISO, also take part in the work. ISO collaborates closely with the International Electrotechnical Commission (IEC) on all matters of electrotechnical standardization.

The procedures used to develop this document and those intended for its further maintenance are described in the ISO/IEC Directives, Part 1. In particular the different approval criteria needed for the different types of ISO documents should be noted. This document was drafted in accordance with the editorial rules of the ISO/IEC Directives, Part 2 (see www.iso.org/directives).

Attention is drawn to the possibility that some of the elements of this document may be the subject of patent rights. ISO shall not be held responsible for identifying any or all such patent rights. Details of any patent rights identified during the development of the document will be in the Introduction and/or on the ISO list of patent declarations received (see www.iso.org/patents).

Any trade name used in this document is information given for the convenience of users and does not constitute an endorsement.

For an explanation on the meaning of ISO specific terms and expressions related to conformity assessment, as well as information about ISO's adherence to the WTO principles in the Technical Barriers to Trade (TBT) see the following URL: Foreword - Supplementary information

The committee responsible for this document is ISO/TC 4, *Rolling bearings*.

This fourth edition cancels and replaces the third edition (ISO 104:2002), which has been technically revised with changes that are editorial and concern mainly on terminology and format.

Rolling bearings — Thrust bearings — Boundary dimensions, general plan

1 Scope

This International Standard specifies preferred boundary dimensions for single-direction and double-direction thrust bearings with flat back faces.

In addition, it gives the minimum bore diameters of housing washers and maximum outside diameters of shaft washers of bearings in dimension series 11, 12, 13, 14, 22, 23 and 24.

Guidelines for the extension of this International Standard for single-direction thrust bearings are given in Annex A.

NOTE Boundary dimensions for aligning thrust bearings (none flat back faces) and aligning seat washers are given in ISO 20516.[2]

2 Normative references

The following documents, in whole or in part, are normatively referenced in this document and are indispensable for its application. For dated references, only the edition cited applies. For undated references, the latest edition of the referenced document (including any amendments) applies.

ISO 582, *Rolling bearings — Chamfer dimensions — Maximum values*

ISO 5593, *Rolling bearings — Vocabulary*

ISO 15241, *Rolling bearings — Symbols for physical quantities*

3 Terms and definitions

For the purposes of this document, the terms and definitions given in ISO 5593 and the following apply.

3.1
single-direction thrust bearing with flat back faces
thrust rolling bearing with flat back faces intended to support axial load in one direction only

3.2
double-direction thrust bearing with flat back faces
thrust rolling bearing with flat back faces intended to support axial load in both directions

3.3
central shaft washer
central washer which is intended to be mounted on a shaft

[SOURCE: ISO 20516:2007, 3.5]

4 Symbols

For the purposes of this International Standard, the symbols given in ISO 15241 and the following apply.

The symbols shown in Figures 1 and 2 and the values given in Tables 1 to 9 denote nominal dimensions, unless specified otherwise.

B	height of central shaft washer
D	outside diameter of housing washer
D_1	bore diameter of housing washer
$D_{1s\,min}$	smallest single bore diameter of housing washer
d	bore diameter of shaft washer, single-direction thrust bearing with flat back faces
d_1	outside diameter of shaft washer, single-direction thrust bearing with flat back faces
$d_{1s\,max}$	largest single outside diameter of shaft washer
d_2	bore diameter of central shaft washer, double-direction thrust bearing with flat back faces
d_3	outside diameter of central shaft washer, double-direction thrust bearing with flat back faces
$d_{3s\,max}$	largest single outside diameter of central shaft washer
r	back face chamfer dimension of shaft washer and housing washer
$r_{s\,min}$	smallest single back face chamfer dimension of shaft washer and housing washer
r_1	face chamfer dimension of central shaft washer
$r_{1s\,min}$	smallest single face chamfer dimension of central shaft washer
T	bearing height, single-direction thrust bearing with flat back faces
T_1	bearing height, double-direction thrust bearing with flat back faces

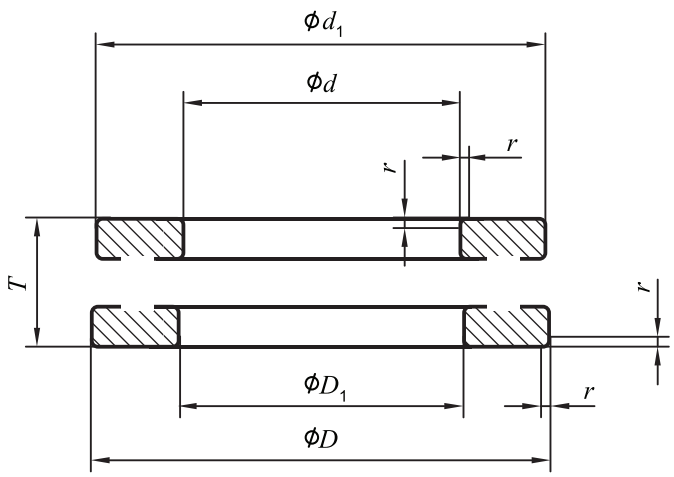

Figure 1 — Single-direction thrust bearing with flat back faces

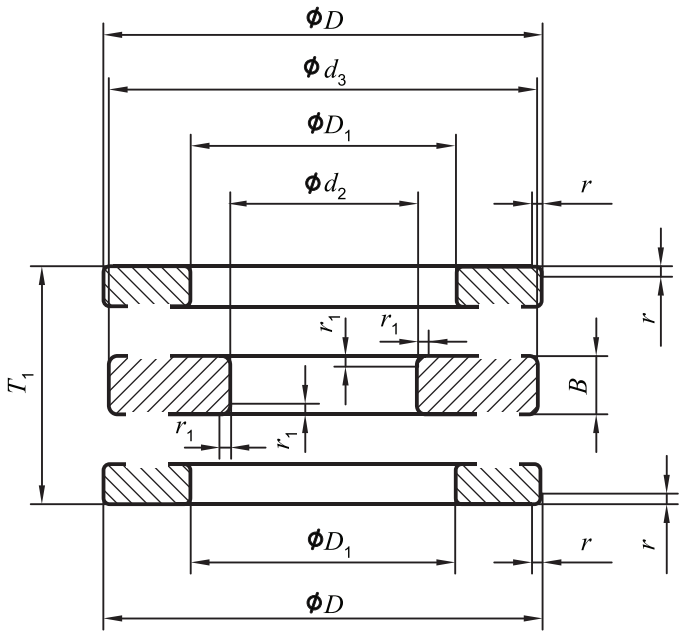

Figure 2 — Double-direction thrust bearing with flat back faces

5 Boundary dimensions

5.1 General

The corresponding largest single chamfer dimensions to the $r_{s\,min}$ dimensions in Tables 1 to 9 and $r_{1s\,min}$ dimensions in Tables 7 to 9 are given in ISO 582.

Chamfer dimensions r and r_1 apply only at the corners indicated in Figures 1 and 2. No dimensions are given for other corners; however, they should not be sharp.

5.2 Single-direction thrust bearings with flat back faces

Dimensions for single-direction thrust bearings with flat back faces are given in Tables 1 to 6.

Table 1 — Single-direction thrust bearings — Diameter series 0

Dimensions in millimetres

d	D	$r_{s\,min}$	Dimension series		
			70	90	10
			T		
4	12	0,3	4	—	6
6	16	0,3	5	—	7
8	18	0,3	5	—	7
10	20	0,3	5	—	7
12	22	0,3	5	—	7
15	26	0,3	5	—	7
17	28	0,3	5	—	7
20	32	0,3	6	—	8

Table 1 *(continued)*

d	D	$r_{s\,min}$	Dimension series		
			70	90	10
			T		
25	37	0,3	6	—	8
30	42	0,3	6	—	8
35	47	0,3	6	—	8
40	52	0,3	6	—	9
45	60	0,3	7	—	10
50	65	0,3	7	—	10
55	70	0,3	7	—	10
60	75	0,3	7	—	10
65	80	0,3	7	—	10
70	85	0,3	7	—	10
75	90	0,3	7	—	10
80	95	0,3	7	—	10
85	100	0,3	7	—	10
90	105	0,3	7	—	10
100	120	0,6	9	—	14
110	130	0,6	9	—	14
120	140	0,6	9	—	14
130	150	0,6	9	—	14
140	160	0,6	9	—	14
150	170	0,6	9	—	14
160	180	0,6	9	—	14
170	190	0,6	9	—	14
180	200	0,6	9	—	14
190	215	1	11	—	17
200	225	1	11	—	17
220	250	1	14	—	22
240	270	1	14	—	22
260	290	1	14	—	22
280	310	1	14	—	22
300	340	1	18	24	30
320	360	1	18	24	30
340	380	1	18	24	30

Table 1 *(continued)*

d	D	$r_{s\,min}$	Dimension series		
			70	90	10
			T		
360	400	1	18	24	30
380	420	1	18	24	30
400	440	1	18	24	30
420	460	1	18	24	30
440	480	1	18	24	30
460	500	1	18	24	30
480	520	1	18	24	30
500	540	1	18	24	30
530	580	1,1	23	30	38
560	610	1,1	23	30	38
600	650	1,1	23	30	38
630	680	1,1	23	30	38
670	730	1,5	27	36	45
710	780	1,5	32	42	53
750	820	1,5	32	42	53
800	870	1,5	32	42	53
850	920	1,5	32	42	53
900	980	2	36	48	63
950	1 030	2	36	48	63
1 000	1 090	2,1	41	54	70
1 060	1 150	2,1	41	54	70
1 120	1 220	2,1	45	60	80
1 180	1 280	2,1	45	60	80
1 250	1 360	3	50	67	85
1 320	1 440	3	—	—	95
1 400	1 520	3	—	—	95
1 500	1 630	4	—	—	105
1 600	1 730	4	—	—	105
1 700	1 840	4	—	—	112
1 800	1 950	4	—	—	120
1 900	2 060	5	—	—	130
2 000	2 160	5	—	—	130
2 120	2 300	5	—	—	140

Table 1 *(continued)*

d	D	$r_{s\,min}$	Dimension series		
			70	90	10
			T		
2 240	2 430	5	—	—	150
2 360	2 550	5	—	—	150
2 500	2 700	5	—	—	160

Table 2 — Single-direction thrust bearings — Diameter series 1

Dimensions in millimetres

d	D	$r_{s\,min}$	Dimension series				
			71	91	11		
			T			$d_{1s\,max}$	$D_{1s\,min}$
10	24	0,3	6	—	9	24	11
12	26	0,3	6	—	9	26	13
15	28	0,3	6	—	9	28	16
17	30	0,3	6	—	9	30	18
20	35	0,3	7	—	10	35	21
25	42	0,6	8	—	11	42	26
30	47	0,6	8	—	11	47	32
35	52	0,6	8	—	12	52	37
40	60	0,6	9	—	13	60	42
45	65	0,6	9	—	14	65	47
50	70	0,6	9	—	14	70	52
55	78	0,6	10	—	16	78	57
60	85	1	11	—	17	85	62
65	90	1	11	—	18	90	67
70	95	1	11	—	18	95	72
75	100	1	11	—	19	100	77
80	105	1	11	—	19	105	82
85	110	1	11	—	19	110	87
90	120	1	14	—	22	120	92
100	135	1	16	21	25	135	102
110	145	1	16	21	25	145	112
120	155	1	16	21	25	155	122
130	170	1	18	24	30	170	132
140	180	1	18	24	31	178	142
150	190	1	18	24	31	188	152

Table 2 *(continued)*

d	D	$r_{s\,min}$	Dimension series				
			71	91	11		
			T			$d_{1s\,max}$	$D_{1s\,min}$
160	200	1	18	24	31	198	162
170	215	1,1	20	27	34	213	172
180	225	1,1	20	27	34	222	183
190	240	1,1	23	30	37	237	193
200	250	1,1	23	30	37	247	203
220	270	1,1	23	30	37	267	223
240	300	1,5	27	36	45	297	243
260	320	1,5	27	36	45	317	263
280	350	1,5	32	42	53	347	283
300	380	2	36	48	62	376	304
320	400	2	36	48	63	396	324
340	420	2	36	48	64	416	344
360	440	2	36	48	65	436	364
380	460	2	36	48	65	456	384
400	480	2	36	48	65	476	404
420	500	2	36	48	65	495	424
440	540	2,1	45	60	80	535	444
460	560	2,1	45	60	80	555	464
480	580	2,1	45	60	80	575	484
500	600	2,1	45	60	80	595	504
530	640	3	50	67	85	635	534
560	670	3	50	67	85	665	564
600	710	3	50	67	85	705	604
630	750	3	54	73	95	745	634
670	800	4	58	78	105	795	674
710	850	4	63	85	112	845	714
750	900	4	67	90	120	895	755
800	950	4	67	90	120	945	805
850	1 000	4	67	90	120	995	855
900	1 060	5	73	95	130	1 055	905
950	1 120	5	78	103	135	1 115	955
1 000	1 180	5	82	109	140	1 175	1 005