SLOVENSKI STANDARD
SIST EN 4702-03:2018

01-januar-2018

Aeronavtika - Sponči sistemi za hitro sprostitev za nestrukturno uporabo in notranje obloge - 03. del: Stojni vijak - hitro sproščanje in zapiranje

Aerospace series - Quick release fastening systems for non-structural and lining applications - Part 03: Stud - quick-release and locking

Luft- und Raumfahrt - Schnellverschlusssysteme für nicht-strukturelle und Innenausstattungsanwendungen - Teil 03: Bolzen - Schnellauslösend und -schließend

Série aérospatiale - Fixations rapides filetées pour applications non-structurales et revêtements intérieurs - Partie 03: Pion à démontage et à verrouillage rapide

Ta slovenski standard je istoveten z: EN 4702-03:2017

ICS:

49.030.20 Sorniki, vijaki, stebelni vijaki Bolts, screws, studs

SIST EN 4702-03:2018 en,fr,de

EUROPEAN STANDARD

NORME EUROPÉENNE

EUROPÄISCHE NORM

EN 4702-03

October 2017

ICS 49.035

English Version

Aerospace series - Quick release fastening systems for non-structural and lining applications - Part 03: Stud - quick-release and locking

Série aérospatiale - Fixations rapides filetées pour applications non-structurales et revêtements intérieurs - Partie 03 : Pion à démontage et à verrouillage rapide

Luft- und Raumfahrt - Schnellverschlusssysteme für nicht-strukturelle und Innenausstattungsanwendungen - Teil 03: Bolzen - Schnell auslösend und schließend

This European Standard was approved by CEN on 23 July 2017.

CEN members are bound to comply with the CEN/CENELEC Internal Regulations which stipulate the conditions for giving this European Standard the status of a national standard without any alteration. Up-to-date lists and bibliographical references concerning such national standards may be obtained on application to the CEN-CENELEC Management Centre or to any CEN member.

This European Standard exists in three official versions (English, French, German). A version in any other language made by translation under the responsibility of a CEN member into its own language and notified to the CEN-CENELEC Management Centre has the same status as the official versions.

CEN members are the national standards bodies of Austria, Belgium, Bulgaria, Croatia, Cyprus, Czech Republic, Denmark, Estonia, Finland, Former Yugoslav Republic of Macedonia, France, Germany, Greece, Hungary, Iceland, Ireland, Italy, Latvia, Lithuania, Luxembourg, Malta, Netherlands, Norway, Poland, Portugal, Romania, Serbia, Slovakia, Slovenia, Spain, Sweden, Switzerland, Turkey and United Kingdom.

EUROPEAN COMMITTEE FOR STANDARDIZATION
COMITÉ EUROPÉEN DE NORMALISATION
EUROPÄISCHES KOMITEE FÜR NORMUNG

CEN-CENELEC Management Centre: Avenue Marnix 17, B-1000 Brussels

Ref. No. EN 4702-03:2017 E

Contents

Page

European foreword

This document (EN 4702-03:2017) has been prepared by the Aerospace and Defence Industries Association of Europe - Standardization (ASD-STAN).

After enquiries and votes carried out in accordance with the rules of this Association, this European Standard has received the approval of the National Associations and the Official Services of the member countries of ASD, prior to its presentation to CEN.

This European Standard shall be given the status of a national standard, either by publication of an identical text or by endorsement, at the latest by April 2018, and conflicting national standards shall be withdrawn at the latest by April 2018.

Attention is drawn to the possibility that some of the elements of this document may be the subject of patent rights. CEN shall not be held responsible for identifying any or all such patent rights.

According to the CEN-CENELEC Internal Regulations, the national standards organizations of the following countries are bound to implement this European Standard: Austria, Belgium, Bulgaria, Croatia, Cyprus, Czech Republic, Denmark, Estonia, Finland, Former Yugoslav Republic of Macedonia, France, Germany, Greece, Hungary, Iceland, Ireland, Italy, Latvia, Lithuania, Luxembourg, Malta, Netherlands, Norway, Poland, Portugal, Romania, Serbia, Slovakia, Slovenia, Spain, Sweden, Switzerland, Turkey and the United Kingdom.

1 Scope

This European Standard specifies the dimensions, mass, tolerances and static values of stud – quick-release and locking for use in fuselage interior equipment and non-structural or secondary structural area.

2 Normative references

The following documents are referred to in the text in such a way that some or all of their content constitutes requirements of this document. For dated references, only the edition cited applies. For undated references, the latest edition of the referenced document (including any amendments) applies.

EN 1934, *Thermal performance of buildings — Determination of thermal resistance by hot box method using heat flow meter — Masonry*

EN 2424, *Aerospace series — Marking of aerospace products*

EN 4710-01, *Aerospace series — Quick release fastening systems for non-structural applications — Part 01: Technical specification*

EN 4702-04, *Aerospace series — Quick release fastening systems for non-structural and lining applications — Part 04: Spring clamp*

EN 22768-1:1993, *General tolerances — Part 1: Tolerances for linear and angular dimensions without individual tolerance indications (ISO 2768-1:1989)*

EN 22768-2:1993, *General tolerances — Part 2: Geometrical tolerances for features without individual tolerance indications (ISO 2768-2:1989)*

EN 62631-3-2, *Dielectric and resistive properties of solid insulating materials — Part 3-2: Determination of resistive properties (DC Methods) — Surface resistance and surface resistivity (IEC 62631-3-2)*

EN ISO 62, *Plastics — Determination of water absorption (ISO 62)*

EN ISO 75-1, *Plastics — Determination of temperature of deflection under load — Part 1: General test method (ISO 75-1)*

EN ISO 75-2, *Plastics — Determination of temperature of deflection under load — Part 2: Plastics and ebonite (ISO 75-2)*

EN ISO 178, *Plastics — Determination of flexural properties (ISO 178)*

EN ISO 179-1, *Plastics — Determination of Charpy impact properties — Part 1: Non-instrumented impact test (ISO 179-1)*

EN ISO 180, *Plastics — Determination of Izod impact strength (ISO 180)*

EN ISO 307, *Plastics — Polyamides — Determination of viscosity number (ISO 307)*

EN ISO 527-1, *Plastics — Determination of tensile properties — Part 1: General principles (ISO 527-1)*

EN ISO 527-2, *Plastics — Determination of tensile properties — Part 2: Test conditions for moulding and extrusion plastics (ISO 527-2)*

EN ISO 899-1, *Plastics — Determination of creep behaviour — Part 1: Tensile creep (ISO 899-1)*

EN ISO 1043-1, *Plastics — Symbols and abbreviated terms — Part 1: Basic polymers and their special characteristics (ISO 1043-1)*

EN ISO 1133-1, *Plastics — Determination of the melt mass-flow rate (MFR) and melt volume-flow rate (MVR) of thermoplastics — Part 1: Standard method (ISO 1133-1)*

EN ISO 1183-1, *Plastics — Methods for determining the density of non-cellular plastics — Part 1: Immersion method, liquid pyknometer method and titration method (ISO 1183-1)*

EN ISO 11357-3, *Plastics — Differential scanning calorimetry (DSC) — Part 3: Determination of temperature and enthalpy of melting and crystallization (ISO 11357-3)*

ISO 11359-1, *Plastics — Thermomechanical analysis (TMA) — Part 1: General principles*

ISO 11359-2, *Plastics — Thermomechanical analysis (TMA) — Part 2: Determination of coefficient of linear thermal expansion and glass transition temperature*

IEC 60250, *Recommended methods for the determination of the permittivity and dielectric dissipation factor of electrical insulating materials at power, audio and radio frequencies including metre wavelengths*

3 Requirements

3.1 Configuration, dimensions, tolerances and masses

The configuration, dimensions, tolerances and mass shall confirm with Figure 1, Figure 2, Figure 3 and Table 1, Table 2, Table 3 and Table 4. Tolerances not specified, shall be in accordance with ISO 2768-mK (EN 22768-1:1993 and EN 22768-2:1993). Missing dimensions are left to manufacturer's option.

3.2 Material

Materials shall be in accordance with Table 5 and Annex A.

3.3 Mechanical characteristics

Ultimate loads see Table 1.

The applicable temperature range is −55 °C to 85 °C.

Table 1 — Loads

Type code	Ultimate tensile loads N	Material code
E	600	A
F	600	A
G	600	A

Configuration, dimensions and masses for the stud type E are shown in Figure 1 and Table 2.

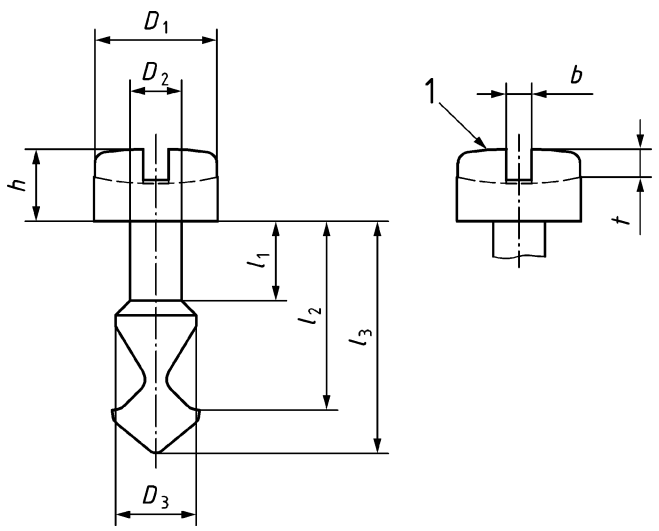

Key

D_1 head diameter

D_2 shaft diameter

D_3 closing curve diameter

h head height

l_1 offset shaft length

l_2 clamping length

l_3 shaft length

b slut

t slut depth

1 marking

Figure 1 — Configuration stud "E"

Table 2 — Dimensions and mass

Type code	Length code	D_1 mm	D_2 mm	D_3 mm	h mm	l_1 mm	l_2 mm	l_3 mm	t mm	b mm	clamping range A[a] mm	clamping range B[b] mm	Mass g
E	14	12,0	5,0	7,0	7,0	3,7	14,3	18,5	2	2,0	2,5 - 3,5	1,5 - 2,5	1,38
	15	12,0	5,0	7,0	7,0	4,7	15,3	19,5	2	2,0	3,5 - 4,5	2,5 - 3,5	1,40
	16	12,0	5,0	7,0	7,0	5,7	16,3	20,5	2	2,0	4,5 - 5,5	3,5 - 4,5	1,43
	17	12,0	5,0	7,0	7,0	6,7	17,3	21,5	2	2,0	5,5 - 6,5	4,5 - 5,5	1,45
	18	12,0	5,0	7,0	7,0	7,7	18,3	22,5	2	2,0	6,5 - 7,5	5,5 - 6,5	1,48
	19	12,0	5,0	7,0	7,0	8,7	19,3	23,5	2	2,0	7,5 - 8,5	6,5 - 7,5	1,50
	20	12,0	5,0	7,0	7,0	9,7	20,3	24,5	2	2,0	8,5 - 9,5	7,5 - 8,5	1,53
	21	12,0	5,0	7,0	7,0	10,7	21,3	25,5	2	2,0	9,5 - 10,5	8,5 - 9,5	1,55

a In combination with spring clamp Type 01 EN 4702-04.

b In combination with spring clamp Type 02 EN 4702-04.

Configuration, dimensions and mass for the stud type F are shown in Figure 2 and Table 3.

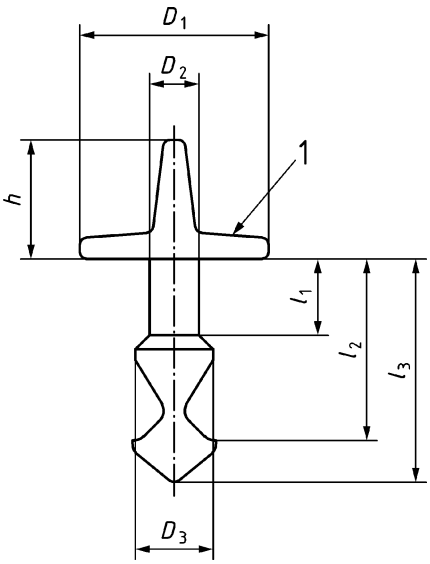

Key

D_1 head diameter

D_2 shaft diameter

D_3 closing curve diameter

h head height

l_1 offset shaft length

l_2 clamping length

l_3 shaft length

1 marking

Figure 2 — Configuration stud "F"

Table 3 — Dimension and mass

Type code	Length code	D_1 mm	D_2 mm	D_3 mm	h mm	l_1 mm	l_2 mm	l_3 mm	clamping range A[a] mm	clamping range B[b] mm	Mass g
F	14	19,0	5,0	7,0	12,0	3,7	14,3	18,5	2,5 - 3,5	1,5 - 2,5	2,04
	15	19,0	5,0	7,0	12,0	4,7	15,3	19,5	3,5 - 4,5	2,5 - 3,5	2,06
	16	19,0	5,0	7,0	12,0	5,7	16,3	20,5	4,5 - 5,5	3,5 - 4,5	2,09
	17	19,0	5,0	7,0	12,0	6,7	17,3	21,5	5,5 - 6,5	4,5 - 5,5	2,11
	18	19,0	5,0	7,0	12,0	7,7	18,3	22,5	6,5 - 7,5	5,5 - 6,5	2,14
	19	19,0	5,0	7,0	12,0	8,7	19,3	23,5	7,5 - 8,5	6,5 - 7,5	2,17
	20	19,0	5,0	7,0	12,0	9,7	20,3	24,5	8,5 - 9,5	7,5 - 8,5	2,19
	21	19,0	5,0	7,0	12,0	10,7	21,3	25,5	9,5 - 10,5	8,5 - 9,5	2,22

a In combination with spring clamp Type 01 EN 4702-04.

b In combination with spring clamp Type 02 EN 4702-04.