SLOVENSKI STANDARD
SIST EN 12697-33:2019

01-maj-2019

Nadomešča:

SIST EN 12697-33:2004+A1:2007

Bitumenske zmesi - Preskusne metode - 33. del: Preskušanci, pripravljeni z valjastim zgoščevalnikom

Bituminous mixtures - Test method - Part 33: Specimen prepared by roller compactor

Asphalt - Prüfverfahren - Teil 33: Probestückvorbereitung mittels Walzverdichtungsgerät

Mélanges bitumineux - Méthodes d'essai - Partie 33 : Préparation de corps d'épreuve au compacteur de plaque

Ta slovenski standard je istoveten z: EN 12697-33:2019

ICS:

93.080.20 Materiali za gradnjo cest Road construction materials

SIST EN 12697-33:2019 **en,fr,de**

EUROPEAN STANDARD

NORME EUROPÉENNE

EUROPÄISCHE NORM

EN 12697-33

March 2019

ICS 93.080.20

Supersedes EN 12697-33:2003+A1:2007

English Version

Bituminous mixtures - Test method - Part 33: Specimen prepared by roller compactor

Mélanges bitumineux - Méthodes d'essai - Partie 33 : Préparation de corps d'épreuve au compacteur de plaque

Asphalt - Prüfverfahren - Teil 33: Probestückvorbereitung mittels Walzverdichtungsgerät

This European Standard was approved by CEN on 19 November 2018.

CEN members are bound to comply with the CEN/CENELEC Internal Regulations which stipulate the conditions for giving this European Standard the status of a national standard without any alteration. Up-to-date lists and bibliographical references concerning such national standards may be obtained on application to the CEN-CENELEC Management Centre or to any CEN member.

This European Standard exists in three official versions (English, French, German). A version in any other language made by translation under the responsibility of a CEN member into its own language and notified to the CEN-CENELEC Management Centre has the same status as the official versions.

CEN members are the national standards bodies of Austria, Belgium, Bulgaria, Croatia, Cyprus, Czech Republic, Denmark, Estonia, Finland, Former Yugoslav Republic of Macedonia, France, Germany, Greece, Hungary, Iceland, Ireland, Italy, Latvia, Lithuania, Luxembourg, Malta, Netherlands, Norway, Poland, Portugal, Romania, Serbia, Slovakia, Slovenia, Spain, Sweden, Switzerland, Turkey and United Kingdom.

EUROPEAN COMMITTEE FOR STANDARDIZATION
COMITÉ EUROPÉEN DE NORMALISATION
EUROPÄISCHES KOMITEE FÜR NORMUNG

CEN-CENELEC Management Centre: Rue de la Science 23, B-1040 Brussels

Contents Page

European foreword

This document (EN 12697-33:2019) has been prepared by Technical Committee CEN/TC 227 "Road materials", the secretariat of which is held by BSI.

This European Standard shall be given the status of a national standard, either by publication of an identical text or by endorsement, at the latest by September 2019, and conflicting national standards shall be withdrawn at the latest by September 2019.

Attention is drawn to the possibility that some of the elements of this document may be the subject of patent rights. CEN shall not be held responsible for identifying any or all such patent rights.

This document supersedes EN 12697-33:2003+A1:2007.

The following is a list of significant technical changes since the previous edition:

— the series title no longer makes the method exclusively for hot mix asphalt;

— [Clause 1] Scope clarified. Listed methods named according to the standard for consistency;

— [Clause 3] [3.1] Deleted. Following sub clauses renumbered;

— [3.2] Symbols and abbreviations deleted. Given in relevant clauses;

— [5.2.1.1] Inappropriate definition of moulds for steel wheel rollers deleted;

— [5.2.1.2] Formula (1) corrected;

— [5.3] Method for steel roller sector introduced. Method using a roller running on vertical sliding steel plates now described in new clause [5.4];

— [5.4.4] Hatching for plates in Figure 3 made vertical for clarity;

— [6.2] Pre-heating of the mould and other metallic moveable parts clarified and the pre-heating temperature shall be reported;

— [7.1.1] Distance between twinned wheels clarified by referring to centre lines;

— [7.3] Compaction procedure using steel roller sector introduced. Compaction procedure using a roller running on vertical sliding steel plates now described in new clause [7.4].

A list of all parts in the EN 12697 series can be found on the CEN website.

According to the CEN-CENELEC Internal Regulations, the national standards organisations of the following countries are bound to implement this European Standard: Austria, Belgium, Bulgaria, Croatia, Cyprus, Czech Republic, Denmark, Estonia, Finland, Former Yugoslav Republic of Macedonia, France, Germany, Greece, Hungary, Iceland, Ireland, Italy, Latvia, Lithuania, Luxembourg, Malta, Netherlands, Norway, Poland, Portugal, Romania, Serbia, Slovakia, Slovenia, Spain, Sweden, Switzerland, Turkey and the United Kingdom.

1 Scope

This document specifies the methods for compacting parallelepipedal specimens (slabs) of bituminous mixtures, to be used directly for subsequent testing, or from which test specimens are cut.

For a given mass of bituminous mixture, the specimens are prepared either under controlled compaction energy, or until a specified volume and therefore air voids content is obtained.

This document describes the following methods of compaction:

— method using a wheel or two wheels fitted with pneumatic tyres;

— methods using a steel roller, which includes 3 different procedures:

  — steel roller;

  — steel roller used on wheel fitted with pneumatic tyres;

  — steel roller running on vertical sliding steel plates;

— method using a steel roller sector.

This document is applicable to bituminous mixtures manufactured in the laboratory or in a mixing plant.

2 Normative references

The following documents are referred to in the text in such a way that some or all of their content constitutes requirements of this document. For dated references, only the edition cited applies. For undated references, the latest edition of the referenced document (including any amendments) applies.

EN 12697-27, *Bituminous mixtures — Test methods — Part 27: Sampling*

EN 12697-35, *Bituminous mixtures — Test methods — Part 35: Laboratory mixing*

3 Terms and definitions

For the purposes of this document, the following terms and definitions apply.

ISO and IEC maintain terminological databases for use in standardization at the following addresses:

— IEC Electropedia: available at http://www.electropedia.org/

— ISO Online browsing platform: available at http://www.iso.org/obp

3.1
pass
one forward or one backward motion of the rolling load

3.2
slab axis
axis of symmetry of slab parallel to the largest dimension of the mould

3.3
lateral axis
axis of a pass parallel to largest dimension of a mould; situated at distance *a* from the slab axis (see Figure 1)

3.4
lateral translation
distance *a* between the slab axis and the lateral axis

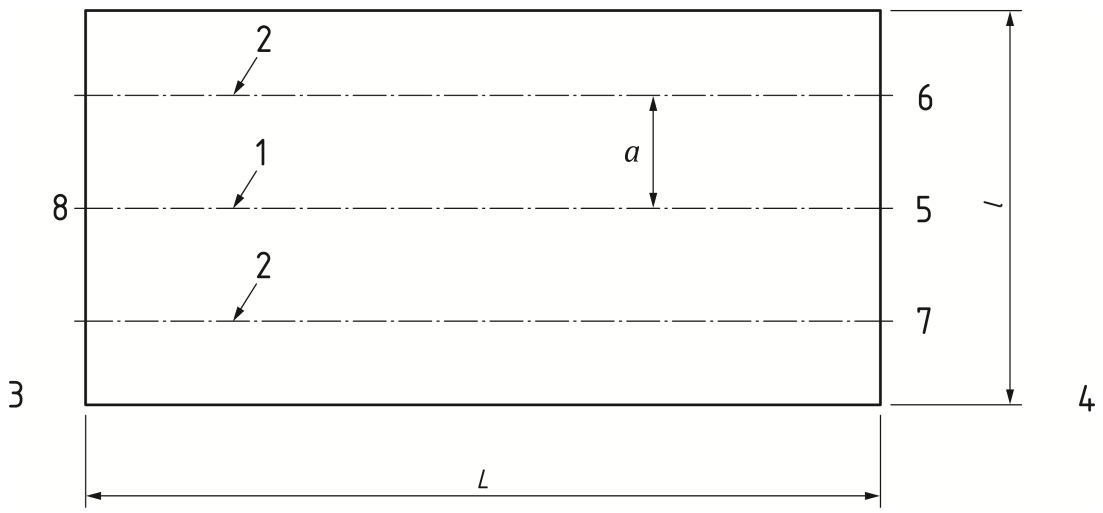

Key

1	axis	5	central position
2	lateral axis	6	rear position
3	left side	7	front position
4	right side	8	longitudinal translation of wheels
L	*length*	*l*	width

Figure 1 — Sketch plan of a slab, front face of equipment

3.5
rear position
lateral axis furthest from the front face of the equipment

3.6
central position
slab axis

3.7
front position
lateral axis nearest to the front face of the equipment

3.8
blocked axis mode
equipment operating mode in which the height of the wheel shaft stays constant in relation to the upper edge of mould during a pass

3.9
freed axis mode
equipment operation mode in which the load applied onto the slab remains constant during a pass

3.10
sweep plan
set of modes by which the wheel(s) pass(es) over the slab; including order of execution, and extent of lateral translation

4 Principle

A given mass of bituminous mixture is compacted in a rectangular mould under a load applied by a smooth steel roller or its sector or equivalent, or by one or more wheel(s) fitted with pneumatic tyres. The smooth steel roller may run directly on the bituminous mixture, or on a number of vertical sliding plates, which apply a kneading action to the mixture. The wheel(s) or roller performs passes at constant velocity, according to a specified sweep plan if applicable.

5 Apparatus

5.1 Method using a wheel or two wheels fitted with pneumatic tyres

5.1.1 One or more moulds with specified interior dimensions ± 2 mm. Usual dimensions are:

— L = 500 mm, l = 180 mm, h = 100 mm or h = 50 mm,

or

— L = 600 mm, l = 400 mm, h = 150 mm or h = 200 mm.

For moulds 600 mm × 400 mm × 150 mm or 600 mm × 400 mm × 200 mm, dimensions are those of the upper part.

In order to facilitate demoulding, moulds may have the shape of a truncated pyramid within the interior dimension ranges specified in order to release the specimen.

Other dimensions may be used, according to the requirements of specific test methods.

5.1.2 A device to compact the bituminous mixture which shall:

— enable application of an adjustable load, F, in range 1 kN ± 10 % to 10 kN ± 5 %, onto the wheel(s);

— comprise of one or more wheels equipped with threadless tyres of 400 × 8 size;

— enable translation of the rolling load at constant velocity, V_t ± 10 %;

— comprise a system for positioning wheel(s) along the different axes of compaction according to predetermined set values for (a ± 20 mm);

— enable operation in blocked axis and freed axis modes;

— comprise a system capable of periodically bringing the surface flush with the upper edge of the mould during compaction;

— one or more blocks of a suitable size (only required if the required thickness of the slab, e, is less than the height of the mould, h).

5.2 Methods using a smooth steel roller

5.2.1 Smooth steel roller

5.2.1.1 One or more moulds with specified interior dimensions (length L and width l) to ± 1 mm.

5.2.1.2 A device to compact the bituminous mixture in the mould.

It may be either a mechanical self-propelled rolling wheel static compactor with forward-reverse control, or a hand driven roller, or a laboratory device, which simulates the operation of a rolling wheel static compactor such as a segmented roller. The wheel shall be able to move back and forth on the mixture in the mould, or the mould shall be placed on a table that moves back and forth beneath a rotating roller.

When the method is used to prepare slabs at a specified volume or air voids content, a vibrating roller or table may also be used.

The device shall enable application of a static load, *F*, such as:

$$F \geq l \times 2 \times D \times 10^{-5} \quad (1)$$

where

F is the load, applied onto wheels or rollers, in newtons (N);

l is the interior width of mould, in millimetres (mm);

D is the diameter of the wheel(s) or roller, in millimetre (mm).

The diameter of the steel roller, *D*, shall be in the range 350 mm to 1 100 mm.

When the method is used to prepare slabs at a specified volume or air voids content, for a mass as specified in 6.1, the width of the steel roller, *b*, shall be greater than:

— the internal width of the mould, *l*, if the roller compactor is not equipped so that compaction stops when the desired height of the slab is reached, or

— the internal width of the mould, *l*, minus 8 mm if the roller compactor is equipped so that compaction stops when the desired height of the slab is reached.

The load, *F*, shall be of such magnitude that the specified volume or air voids content is achieved at a number of roller passes between 10 and 50.

When the method is used to prepare slabs under controlled compaction energy, the width of the steel roller shall be equal to the interior width of the mould minus (10 ± 5) mm.

5.2.2 Steel roller used on wheel fitted with pneumatic tyres

5.2.2.1 One or more moulds as specified in 5.1.1.

5.2.2.2 A device to compact the bituminous mixture which shall conform to the device in 5.1.2 and comprise, if required, a smooth metal cylinder of diameter, *D* 400 mm to 800 mm, thickness between 4 mm and 8 mm, and width equal to the interior width of the mould minus (5 ± 2) mm.

5.3 Method using a steel roller sector

5.3.1 General

The roller sector compaction device consists of a rectangular steel compaction mould and a roller sector which replicates a smooth compaction roller drum. Figure 2 shows an example for the roller sector compaction device.

5.3.2 Roller sector

The surface of the roller sector shall be heatable to a temperature as specified in 6.2. The length and width of the roller sector shall comply with the dimensions of the compaction mould. The roller sector is attached to the loading device in the centre of the steel sector.

The radius of the roller (distance of sector centre to sector surface) shall be between 350 mm and 550 mm.

5.3.3 Compaction mould

Rectangular compaction mould on which the roller sector can exert an alternate rotation maintaining vertical loading of controlled force. The inner surfaces of the mould shall be heatable to the temperature required for use in 6.2.

5.3.4 Loading device

Loading device allowing the vertical movement of the loading piston in controlled force and controlled deflection mode. The load capacity depends on the dimensions of the compaction mould. The piston shall allow vertical movements to compact the plate to the required thickness.

5.3.5 Demoulding facilities

Facilities allowing the demoulding of the asphalt slab after compaction in by non-invasive ways.

5.3.6 Other

— Paper sheet avoiding the sticking of the roller segment to the plate surface. The dimensions of the paper sheet correspond to the inner length and width of the compaction mould.

— Release agent.

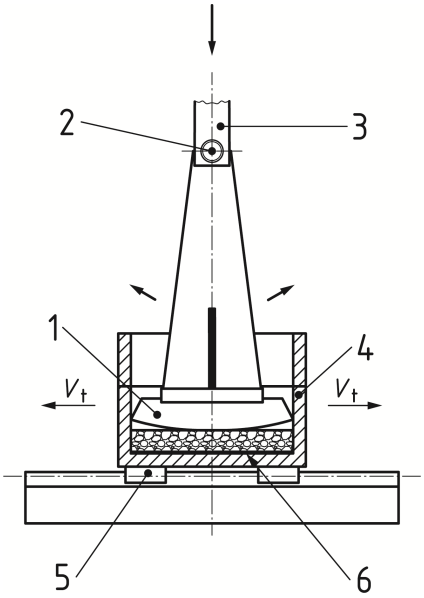

Key

1 roller sector
2 centre of sector/ rotational centre
3 loading piston
4 compaction mould
5 horizontal sled allowing the slipping-free rolling of the sector
6 steel plate as part of a demoulding facility

Figure 2 — Example for a steel roller sector compaction device

5.4 Method using a roller running on vertical sliding steel plates

5.4.1 One or more moulds with specified interior dimensions ± 1 mm.

Usual dimensions are L = 320 mm, l = 260 mm, h ≥ 230 mm.

Other dimensions may be used, according to the requirements of specific test methods.

5.4.2 A device to compact the bituminous mixture in the moulds (see Figure 3) and which shall comprise:

5.4.2.1 A table on which the mould is bolted.

5.4.2.2 One or more adjustable frames or base plates to prepare specimens of varying thickness.

5.4.2.3 Steel sliding plates having the following dimensions:

— length, b = (260 ± 5) mm;

— width, w ± 0,2 mm, where w constant for a given test device within 80 mm and 120 mm;

— thickness, t, ± 0,1 mm, where t constant for a given test device within 10 mm and 15 mm.

The number of sliding plates, n, shall be such as, $n \times t$ is slightly smaller than L, so that they can move freely in the vertical direction during compaction, without allowing bituminous mortar to enter between the plates.