SLOVENSKI STANDARD
oSIST prEN 131-4:2018

01-februar-2018

Lestve - 4. del: Lestve z enim ali več pregibi

Ladders - Part 4: Single or multiple hinge-joint ladders

Leitern - Teil 4: Ein- oder Mehrgelenkleitern

Echelles - Partie 4 : Echelles articulées à articulations simple et multiple

Ta slovenski standard je istoveten z: prEN 131-4

ICS:

97.145 Lestve Ladders

oSIST prEN 131-4:2018 en,fr,de

EUROPEAN STANDARD

NORME EUROPÉENNE

EUROPÄISCHE NORM

DRAFT
prEN 131-4

November 2017

ICS 97.145

Will supersede EN 131-4:2007

English Version

Ladders - Part 4: Single or multiple hinge-joint ladders

Echelles - Partie 4 : Echelles articulées à articulations simple et multiple

Leitern - Teil 4: Ein- oder Mehrgelenkleitern

This draft European Standard is submitted to CEN members for enquiry. It has been drawn up by the Technical Committee CEN/TC 93.

If this draft becomes a European Standard, CEN members are bound to comply with the CEN/CENELEC Internal Regulations which stipulate the conditions for giving this European Standard the status of a national standard without any alteration.

This draft European Standard was established by CEN in three official versions (English, French, German). A version in any other language made by translation under the responsibility of a CEN member into its own language and notified to the CEN-CENELEC Management Centre has the same status as the official versions.

CEN members are the national standards bodies of Austria, Belgium, Bulgaria, Croatia, Cyprus, Czech Republic, Denmark, Estonia, Finland, Former Yugoslav Republic of Macedonia, France, Germany, Greece, Hungary, Iceland, Ireland, Italy, Latvia, Lithuania, Luxembourg, Malta, Netherlands, Norway, Poland, Portugal, Romania, Serbia, Slovakia, Slovenia, Spain, Sweden, Switzerland, Turkey and United Kingdom.

Recipients of this draft are invited to submit, with their comments, notification of any relevant patent rights of which they are aware and to provide supporting documentation.

Warning : This document is not a European Standard. It is distributed for review and comments. It is subject to change without notice and shall not be referred to as a European Standard.

EUROPEAN COMMITTEE FOR STANDARDIZATION
COMITÉ EUROPÉEN DE NORMALISATION
EUROPÄISCHES KOMITEE FÜR NORMUNG

CEN-CENELEC Management Centre: Avenue Marnix 17, B-1000 Brussels

Contents

Page

European foreword 3
1 Scope 4
2 Normative references 4
3 Terms and definitions 4
4 Functional dimensions 7
4.1 Ladders in single, standing and transformable position 7
4.2 Ladders hinged in "leaning ladder or standing ladder" positions 7
4.3 Dimension for ladders hinged with b_2 equal at the top and at the bottom of the ladders 7
4.4 Hinged ladders in "platform position" 8
4.5 Hinged ladders in "stand-off" position 9
5 Requirements 9
5.1 General 9
5.2 Decking component 10
5.3 Ladder hinged in the longitudinal direction 10
6 Test methods 10
6.1 General 10
6.2 Tests method for ladders hinged in the longitudinal direction 10
6.2.1 Principle 10
6.2.2 Strength test for ladders with more than one pair of hinges in longitudinal direction 10
6.2.3 Cyclic test of hinge joint 12
6.2.4 Test of the ladder in the platform position 12
6.3 Test method for ladders hinged in the lateral direction 13
6.3.1 Principle 13
6.3.2 Cyclic test of hinge joints 14
6.3.3 Capacity to pass from storage positions to working position 14
7 Marking 14
8 User instructions 14
Annex A (normative) Test sequence 16
Annex B (informative) A-deviations 18

European foreword

This document (prEN 131-4:2017) has been prepared by Technical Committee CEN/TC 93 “Ladders”, the secretariat of which is held by DIN.

This document is currently submitted to the CEN Enquiry.

This document will supersede EN 131-4:2007.

This document has been prepared under a mandate given to CEN by the European Commission and the European Free Trade Association.

Compared to EN 131-4:2007 the following modifications have been made:

a) outside width b_5 added;

b) provisions for ladders with the same base width at the top as at the bottom added;

c) requirements for the inner width b_1 between the stile and the outside width b_2 added;

d) strength test of the ladder in position of use;

e) classes “non professional” and “professional” introced.

This European Standard is one of a series about ladders. Other standards of this series are listed in Clause 2.

1 Scope

This European Standard specifies the requirements, tests and marking of hinged combination ladders with one or several hinge joints.

This European Standard is not applicable to hinge-joints of combination and standing ladders as defined by EN 131-1.

This part of the standard is intended to be used in conjunction with EN 131-1, EN 131-2 and EN 131-3.

2 Normative references

The following documents are referred to in the text in such a way that some or all of their content constitutes requirements of this document. For dated references, only the edition cited applies. For undated references, the latest edition of the referenced document (including any amendments) applies.

EN 131-1, *Ladders - Part 1: Terms, types, functional sizes*

EN 131-2, *Ladders — Part 2: Requirements, testing, marking*

EN 131-3, *Ladders - Part 3: User Instructions*

3 Terms and definitions

For the purposes of this document, the terms and definitions given in EN 131-1 and the following apply.

ISO and IEC maintain terminological databases for use in standardization at the following addresses:

- IEC Electropedia: available at http://www.electropedia.org/
- ISO Online browsing platform: available at http://www.iso.org/obp

3.1
ladder hinged in the longitudinal direction
ladder with hinge-joints of which enable folding (manual or automatic) in the longitudinal direction

Note 1 to entry: Excluding ladders covered in EN 131-1.

3.1.1
ladder with one lockable hinge joint device
ladder including a hinge-joint device with at least one predetermined lockable position with or without extendible parts

Note 1 to entry: See Figures 1, 2, 3 and 4.

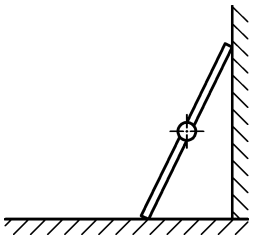

Figure 1 — Position as leaning ladder

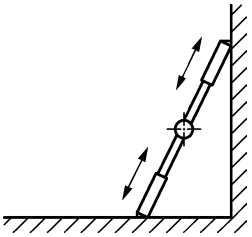

Figure 2 — Position as leaning ladder with extendable legs

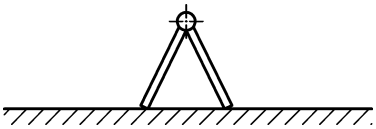

Figure 3 — Position as standing ladder

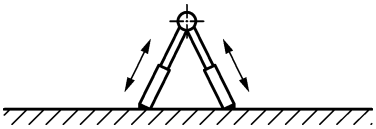

Figure 4 — Position as standing ladder with extendable legs

3.1.2
ladder with several lockable hinge-joint devices
ladder having several hinge-joint devices with at least one fixed position which can be locked by hinge joint devices at predetermined angles

Note 1 to entry: See Figures 5 to 8.

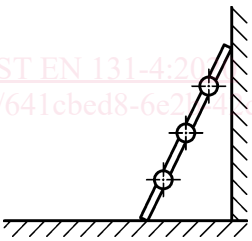

Figure 5 — Position 1 “Single ladder”

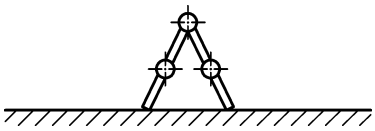

Figure 6 — Position 2 “Standing ladder”

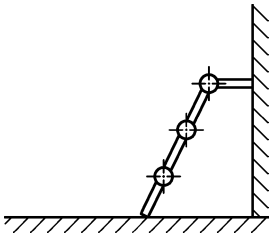

Figure 7 — Position 3 "Stand–off"

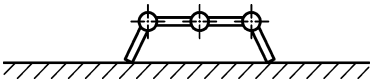

Figure 8 — Position 4 "Platform"

3.2
ladder hinged in the lateral direction
ladder having several hinge-joints enabling it to be folded laterally

Note 1 to entry: The hinge-joints can be located between the legs and the steps. The steps themselves can be equipped with hinge-joints.

Note 2 to entry: See Figure 9.

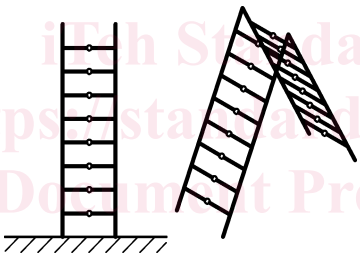

Figure 9 — Ladder hinged in the lateral direction

3.3
decking component
single or multiple element forming a standing surface enabling the use of a multiple hinge-joint ladder in the "platform" position

3.3.1
reference level
upper surface of the decking component, including the anti-skid surface

3.3.2
decking component height
h_3
height above ground of the reference level

3.3.3
overhang
l_{10}
length of the decking component after the last support point

3.3.4
outside width
b_5
width measured from the outside of the stiles at the same position as where b_1 is been determined

4 Functional dimensions

4.1 Ladders in single, standing and transformable position

Dimensions are given in EN 131-1.

4.2 Ladders hinged in "leaning ladder or standing ladder" positions

If these ladders can be used as leaning ladders then functional dimensions for leaning ladders will apply. If these ladders can be used as standing ladders then the functional dimensions for standing ladders will apply.

Refer to subclauses of EN 131-1 dealing with the type of position.

The inner width b_1 shall be measured as shown in Figure 10.

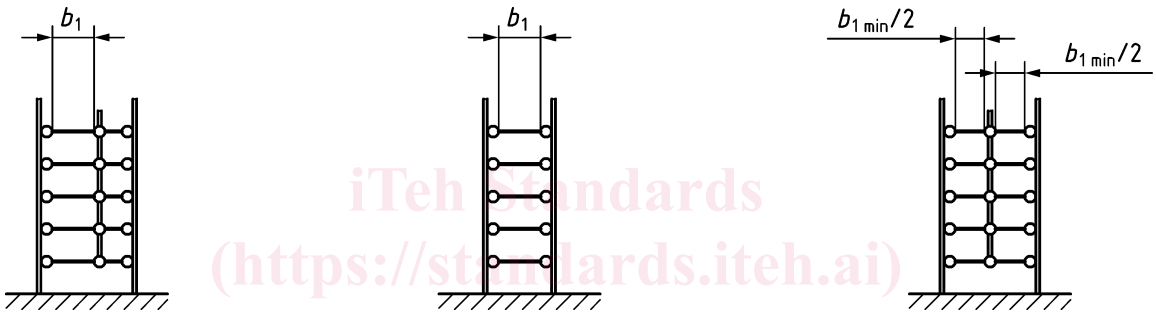

Figure 10 — Dimension b_1

4.3 Dimension for ladders hinged with b_2 equal at the top and at the bottom of the ladders

If ladders are provided with the same base width at the top of the ladder as at the bottom of the ladder (see Figure 11) the formula for these ladders in leaning ladder position is according to Table 1. For ladders that can only be used in standing ladder position EN 131-1 shall be applied.

If the ladder has an equal b_2 on the bottom and on the top, then the clearance between the wall and any parts of the ladder other than the feet shall be a minimum of 10 mm when the ladder is placed in an angle of 75°.

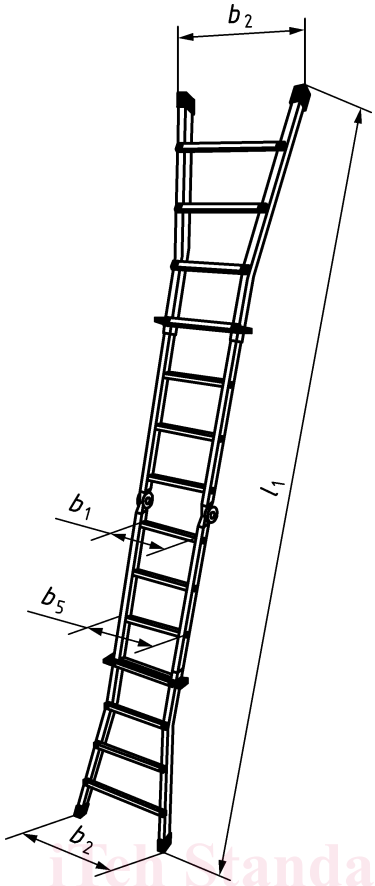

Figure 11 — Ladder hinged with b_2 equal at the top and at the bottom of the ladders

Table 1 — Functional dimensions

Dimensions in millimetres

	b_1	b_2
min.	280	$b_5 + 0{,}05 \times l_1$
max.	–	–[a]

[a] The dimension b_2 for leaning ladders may be limited to a maximum of 1 200 mm at the discretion of the manufacturer.

4.4 Hinged ladders in "platform position"

Table 2 — Functional dimensions

	h_3 mm	l_{10} mm	α[a]	α[b]
min.	–	–	65°	65°
max.	1 000	50	75°	70°

[a] For rung ladders.
[b] For step ladders.