SLOVENSKI STANDARD
oSIST prEN 13155:2017

01-november-2017

Dvigala (žerjavi) - Varnost - Snemljiva dvigalna sredstva

Crane - Safety - Non-fixed load lifting attachments

Ta slovenski standard je istoveten z: **prEN 13155**

ICS:

53.020.30	Pribor za dvigalno opremo	Accessories for lifting equipment

oSIST prEN 13155:2017 **en,fr,de**

EUROPEAN STANDARD

NORME EUROPÉENNE

EUROPÄISCHE NORM

DRAFT
prEN 13155

September 2017

ICS 53.020.30

Will supersede EN 13155:2003+A2:2009

English Version

Crane - Safety - Non-fixed load lifting attachments

This draft European Standard is submitted to CEN members for enquiry. It has been drawn up by the Technical Committee CEN/TC 147.

If this draft becomes a European Standard, CEN members are bound to comply with the CEN/CENELEC Internal Regulations which stipulate the conditions for giving this European Standard the status of a national standard without any alteration.

This draft European Standard was established by CEN in three official versions (English, French, German). A version in any other language made by translation under the responsibility of a CEN member into its own language and notified to the CEN-CENELEC Management Centre has the same status as the official versions.

CEN members are the national standards bodies of Austria, Belgium, Bulgaria, Croatia, Cyprus, Czech Republic, Denmark, Estonia, Finland, Former Yugoslav Republic of Macedonia, France, Germany, Greece, Hungary, Iceland, Ireland, Italy, Latvia, Lithuania, Luxembourg, Malta, Netherlands, Norway, Poland, Portugal, Romania, Serbia, Slovakia, Slovenia, Spain, Sweden, Switzerland, Turkey and United Kingdom.

Recipients of this draft are invited to submit, with their comments, notification of any relevant patent rights of which they are aware and to provide supporting documentation.

Warning : This document is not a European Standard. It is distributed for review and comments. It is subject to change without notice and shall not be referred to as a European Standard.

EUROPEAN COMMITTEE FOR STANDARDIZATION
COMITÉ EUROPÉEN DE NORMALISATION
EUROPÄISCHES KOMITEE FÜR NORMUNG

CEN-CENELEC Management Centre: Avenue Marnix 17, B-1000 Brussels

Contents

Page

European foreword

This document (prEN 13155:2017) has been prepared by Technical Committee CEN/TC 147 “Cranes - Safety”, the secretariat of which is held by BSI.

This document is currently submitted to the CEN Enquiry.

This document will supersede EN 13155:2003+A2:2009.

This document has been prepared under a mandate given to CEN by the European Commission and the European Free Trade Association, and supports essential requirements of EU Directive(s).

For relationship with EU Directive(s), see informative Annex ZA, which is an integral part of this document.

The main modifications concern:

— general requirement to introduce the reference to EN 13001-1 for the calculation;

— vacuum lifters;

— lifting magnet;

— lifting beams for which the static load vary according to the working load; and

— the addition to the scope of lifting insert systems for lifting prefabricated concrete products.

Introduction

This European Standard has been prepared to be a harmonized standard to provide one means for non-fixed load lifting attachments used on cranes to conform with the essential health and safety requirements of the Machinery Directive, as amended.

This European Standard is a type C standard as stated in EN ISO 12100.

The machinery concerned and the extent to which hazards are covered are indicated in the scope of this standard.

When provisions of this type C standard are different from those which are stated in type A or B standards, the provisions of this type C standard take precedence over the provisions of the other standards, for non-fixed load lifting attachments which have been designed and built according to the provisions of this type C standard.

1 Scope

This European Standard specifies safety requirements for the following non-fixed load lifting attachments for cranes, hoists and manually controlled load manipulating devices:

a) plate clamps;

b) vacuum lifters;

   1) self-priming;

   2) non-self-priming (pump, venturi, turbine);

c) electric lifting magnets (battery fed and mains-fed);

d) permanent lifting magnets;

e) electro-permanent lifting magnets;

f) lifting beams;

g) C-hooks;

h) lifting forks;

i) clamps; and

j) lifting insert systems for use in normal weight concrete,

as defined in Clause 3.

This standard does not give requirements for:

— non-fixed load lifting attachments in direct contact with foodstuffs or pharmaceuticals requiring a high level of cleanliness for hygiene reasons;

— hazards resulting from handling specific hazardous materials (e.g. explosives, hot molten masses, radiating materials);

— hazards caused by operation in an explosive atmosphere;

— hazards caused by noise;

— hazards relating to the lifting of persons;

— electrical hazards; and

— hazards due to hydraulic and pneumatic components.

For high risk applications not covered by this standard, EN 13001-2:2014, 4.3.2 gives guidance to deal with them.

This standard covers the proof of static strength, the elastic stability and the proof of fatigue strength. For attachments designed for less than 16 000 lifting cycles, the proof of fatigue strength is covered by the proof of static strength (elastic and yielded conditions, see 5.1.2.1).

NOTE This standard does not generally cover attachments intended to lift above people. Some attachments are suitable for that purpose if equipped with additional safety features. In such cases the additional safety features are specified in the specific requirements.

This standard does not cover slings, ladles, expanding mandrels, buckets, grabs, or grab buckets.

This standard is not applicable to non-fixed load lifting attachments for crane, hoists and manually controlled load manipulating devices which are manufactured before the date this publication as EN.

2 Normative references

The following documents, in whole or in part, are normatively referenced in this document and are indispensable for its application. For dated references, only the edition cited applies. For undated references, the latest edition of the referenced document (including any amendments) applies.

EN 206:2013+A1:2016, *Concrete — Specification, performance, production and conformity*

EN 349:1993+A1:2008, *Safety of machinery — Minimum gaps to avoid crushing of parts of the human body*

EN 457:1992, *Safety of machinery — Auditory danger signals — General requirements, design and testing (ISO 7731:1986, modified)*

EN 818-4:1996+A1:2008, *Short link chain for lifting purposes — Safety — Part 4: Chain slings - Grade 8*

EN 818-5:1999+A1:2008, *Short link chain for lifting purposes — Safety — Part 5: Chain slings - Grade 4*

EN 842:1996+A1:2008, *Safety of machinery — Visual danger signals — General requirements, design and testing*

EN 981:1996+A1:2008, *Safety of machinery — System of auditory and visual danger and information signals*

EN 1492-1:2000+A1:2008, *Textile slings — Safety — Part 1: Flat woven webbing slings made of man-made fibres for general purpose use*

EN 1492-2:2000+A1:2008, *Textile slings — Safety — Part 2: Roundslings made of man-made fibres for general purpose use*

EN 1492-4:2004+A1:2008, *Textile slings — Safety — Part 4: Lifting slings for general service made from natural and man-made fibre ropes*

EN 1677-1:2000+A1:2008, *Components for slings — Safety — Part 1: Forged steel components, Grade 8*

EN 1677-2:2000+A1:2008, *Components for slings — Safety — Part 2: Forged steel lifting hooks with latch, Grade 8*

EN 1677-3:2001+A1:2008, *Components for slings — Safety — Part 3: Forged steel self-locking hooks — Grade 8*

EN 1677-4:2000+A1:2008, *Components for slings — Safety — Part 4: Links, Grade 8*

EN 1677-5:2001+A1:2008, *Components for slings — Safety — Part 5: Forged steel lifting hooks with latch — Grade 4*

EN 1677-6:2001+A1:2008, *Components for slings — Safety — Part 6: Links - Grade 4*

EN 10029:2010, *Hot-rolled steel plates 3 mm thick or above — Tolerances on dimensions and shape*

EN 10034:1993, *Structural steel I and H sections — Tolerances on shape and dimensions*

EN 12385-4:2002+A1:2008, *Steel wire ropes — Safety — Part 4: Stranded ropes for general lifting applications*

EN 13001-1:2015, *Cranes — General design — Part 1: General principles and requirements*

EN 13001-3-1:2012+A1:2013, *Cranes — General Design — Part 3-1: Limit States and proof competence of steel structure*

EN 13369:2013, *Common rules for precast concrete products*

EN 13414-1:2003+A2:2008, *Steel wire rope slings — Safety — Part 1: Slings for general lifting service*

EN 13557:2003+A2:2008, *Cranes — Controls and control stations*

EN ISO 9606-1:2013, *Qualification testing of welders — Fusion welding — Part 1: Steels (ISO 9606-1:2012 including Cor 1:2012)*

EN ISO 12100:2010, *Safety of machinery — General principles for design — Risk assessment and risk reduction (ISO 12100:2010)*

EN ISO 13849-1:2008, *Safety of machinery — Safety-related parts of control systems — Part 1: General principles for design (ISO 13849-1:2006)*

EN ISO 15614-1:2017, *Specification and qualification of welding procedures for metallic materials — Welding procedure test — Part 1: Arc and gas welding of steels and arc welding of nickel and nickel alloys (ISO 15614-1:2017)*

3 Terms and definitions

For the purposes of this document, the terms and definitions given in EN ISO 12100 and the following apply.

3.1
adhesion force
force required to remove the load from a vacuum lifter

3.2
C-hook
equipment in the form of a ‘C’ used for lifting hollow loads (see Figure 1)

EXAMPLE Examples of hollow loads are coils and pipes.

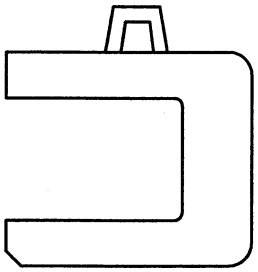

Figure 1 — Example of a C-hook

3.3
working coefficient
arithmetic ratio between the maximum load which a lifting accessory is able to hold and the maximum working load marked

3.4
static test coefficient
arithmetic ratio between the load used to carry out the static tests on a lifting accessory and the maximum working load

3.5
clamp
equipment used to handle loads by clamping on a specific part of the load

Note 1 to entry: Clamps are also known as tongs. For a definition of plate clamps see 3.6 and see Figure 2 for an example of a clamp.

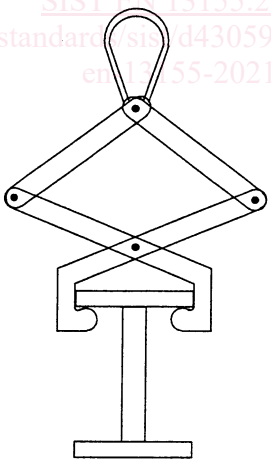

Figure 2 — Example of a clamp

3.6
plate clamps
non-powered equipment used to handle steel plates by clamping them between jaws (see Figure 3)

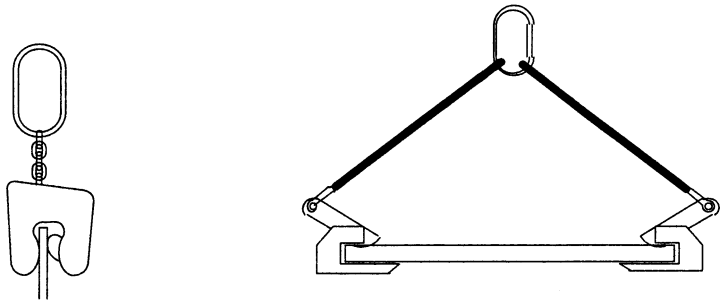

Figure 3 — Examples of plate clamps

3.7
high risk area
area where the consequences of failure extending beyond the vicinity of the lifting equipment, with high consequences in terms of loss of human lives or with very serious economic, social and environmental consequences

EXAMPLE Examples of high risk areas are construction and demolition sites and areas where the environment is constantly changing.

3.8
individual verification
verification carried out on every item produced