SLOVENSKI STANDARD
oSIST prEN 15182-3:2018

01-november-2018

Prenosna oprema za črpanje in uporabo gasilnega sredstva iz gasilskih črpalk - Gasilski ročniki - 3. del: Ročniki PN 16 s polnim curkom in/ali z razpršenim curkom pod določenim fiksnim kotom

Portable equipment for projecting extinguishing agents supplied by firefighting pumps - Hand-held branchpipes for fire service use - Part 3: Smooth bore jet and/or one fixed spray jet angle branchpipes PN 16

Tragbare Geräte zum Ausbringen von Löschmitteln, die mit Feuerlöschpumpen gefördert werden - Strahlrohre für die Brandbekämpfung - Teil 3: Strahlrohre mit Vollstrahl und/oder einem unveränderlichem Sprühstrahlwinkel PN 16

Equipement portable de projection d'agents d'extinction alimenté par des pompes à usage incendie - Lances à main destinées aux services d'incendie et de secours - Partie 3: Lances à jet plein et/ou une diffusion à angle fixe PN 16

Ta slovenski standard je istoveten z: prEN 15182-3

ICS:

13.220.10 Gašenje požara Fire-fighting

oSIST prEN 15182-3:2018 en,fr,de

EUROPEAN STANDARD

NORME EUROPÉENNE

EUROPÄISCHE NORM

DRAFT
prEN 15182-3

September 2018

ICS 13.220.10

Will supersede EN 15182-3:2007+A1:2009

English Version

Portable equipment for projecting extinguishing agents supplied by firefighting pumps - Hand-held branchpipes for fire service use - Part 3: Smooth bore jet and/or one fixed spray jet angle branchpipes PN 16

Equipement portable de projection d'agents d'extinction alimenté par des pompes à usage incendie - Lances à main destinées aux services d'incendie et de secours - Partie 3: Lances à jet plein et/ou une diffusion à angle fixe PN 16

Tragbare Geräte zum Ausbringen von Löschmitteln, die mit Feuerlöschpumpen gefördert werden - Strahlrohre für die Brandbekämpfung - Teil 3: Strahlrohre mit Vollstrahl und/oder einem unveränderlichem Sprühstrahlwinkel PN 16

This draft European Standard is submitted to CEN members for enquiry. It has been drawn up by the Technical Committee CEN/TC 192.

If this draft becomes a European Standard, CEN members are bound to comply with the CEN/CENELEC Internal Regulations which stipulate the conditions for giving this European Standard the status of a national standard without any alteration.

This draft European Standard was established by CEN in three official versions (English, French, German). A version in any other language made by translation under the responsibility of a CEN member into its own language and notified to the CEN-CENELEC Management Centre has the same status as the official versions.

CEN members are the national standards bodies of Austria, Belgium, Bulgaria, Croatia, Cyprus, Czech Republic, Denmark, Estonia, Finland, Former Yugoslav Republic of Macedonia, France, Germany, Greece, Hungary, Iceland, Ireland, Italy, Latvia, Lithuania, Luxembourg, Malta, Netherlands, Norway, Poland, Portugal, Romania, Serbia, Slovakia, Slovenia, Spain, Sweden, Switzerland, Turkey and United Kingdom.

Recipients of this draft are invited to submit, with their comments, notification of any relevant patent rights of which they are aware and to provide supporting documentation.

Warning : This document is not a European Standard. It is distributed for review and comments. It is subject to change without notice and shall not be referred to as a European Standard.

EUROPEAN COMMITTEE FOR STANDARDIZATION
COMITÉ EUROPÉEN DE NORMALISATION
EUROPÄISCHES KOMITEE FÜR NORMUNG

CEN-CENELEC Management Centre: Rue de la Science 23, B-1040 Brussels

Ref. No. prEN 15182-3:2018 E

Contents

Page

European foreword

This document (prEN 15182-3:2018) has been prepared by Technical Committee CEN/TC 192 “Fire and rescue service equipment”, the secretariat of which is held by BSI.

This document is currently submitted to the CEN Enquiry.

This document will supersede EN 15182-3:2007+A1:2009.

Compared to EN 15182-3:2007+A1:2009 the following changes have been made:

— each verification has been placed under the corresponding requirement;

— a test to measure the forces needed to move the rotating elements which have detents (4.2.2) has been added;

— the requirements for flowrates (4.3.2) have been updated;

— the verifications for leak-tightness (4.4) and hydrostatic behaviour (4.5) have been updated;

— improvement of the wording/editorial changes.

1 Scope

In addition to the requirements given in EN 15182-1:–[1)], this document applies to hand-held branchpipes with smooth bore jet and/or one fixed spray jet angle branchpipes PN 16, with a maximum flow rate of 1 000 l/min at a reference pressure of 6 bar (0,6 MPa). It deals with:

— safety requirements;

— performance requirements;

— test methods.

This document applies to branchpipes as defined in Annex A of EN 15182-1:–[1)].

WARNING 1 — These branchpipes offer no or inadequate protection for firefighters when the spray angle is less than 30 ° and therefore, should not be used in high risk firefighting situations such as internal attack.

WARNING 2 — These branchpipes should not be used when fighting fires in or near electrical installations when the spray angle is less than 30° without written authorisation from the manufacturer in the manual. This authorisation from the manufacturer should include safety distances.

2 Normative references

The following documents are referred to in the text in such a way that some or all of their content constitutes requirements of this document. For dated references, only the edition cited applies. For undated references, the latest edition of the referenced document (including any amendments) applies. For undated references, the latest edition of the referenced document (including any amendments) applies.

EN 15182-1:–[1)], *Portable equipment for projecting extinguishing agents supplied by firefighting pumps — Hand-held branchpipes for fire service use – Part 1: Common requirements*

3 Terms and definitions

For the purposes of this document, the terms and definitions given in EN 15182-1:–[1)] and the following apply.

ISO and IEC maintain terminological databases for use in standardization at the following addresses:

— IEC Electropedia: available at http://www.electropedia.org/

— ISO Online browsing platform: available at http://www.iso.org/obp

3.1
smooth bore branchpipe
branchpipe providing a solid water stream

[1)] Under preparation. Stage at the time of publication: prEN 15182-1:2018.

4 Requirements and verification

4.1 General

The branchpipes covered by this document shall comply with EN 15182-1:–[1)].

All the tests defined in this document are type tests.

Unless otherwise specified, tests shall be carried out at the reference pressure p_R.

4.2 Mechanical characteristics

4.2.1 Dimensions and mass

Branchpipes (without inlet coupling) shall not exceed the dimensions and masses specified in Table 1.

Table 1 — Dimensions and mass

Maximum flow rate l/min	Dimensions mm	Mass kg
≤ 500	450 × 300 × 150	3,5
> 500	600 × 350 × 200	5,5
NOTE The maximum mass does not apply to branchpipes designed for special application (e.g. fire-fighting on sea-going vessels, disinfection etc.).		

Verification

Dimensions and mass shall be measured in accordance with Table 1.

4.2.2 Operating and handling elements

The torques needed to move the operating elements shall not exceed the values given in Table 2 at pressures up to the nominal pressure.

Table 2 — Maximum torques

Type of operating element	Torque N·m
Lever	15
Valve handle	15
Rotating operating elements	10
Rotating inlet elements for fixed couplings	5

Verification

The torques shall be measured in accordance with Table 2. This test shall be conducted with water only.

The forces needed to move the rotating elements which have detents shall be between 15 N and 75 N.

Verification

— *Measure the force of rotating elements which have detents in dry conditions without flowing.*

— *Make the rotating element turn 300 cycles without flowing water.*

NOTE A rotation means rotating the element fully in one direction and back to the starting point.

— *Measure the force without flowing water at the end of the previous test which shall remain in the range of 15 N to 75 N.*

For branchpipes that are opened and closed with a valve handle, the "closed" position shall be located in the direction of the flow. If a different operating element is used, with the exception of a trigger, the "closed" position shall be clearly identified.

Verification

Visual inspection.

4.2.3 Jet adjustment positions

The jet positions, if applicable, shall be clearly marked.

Verification

Visual inspection.

If the branchpipe has a spray jet, the spray jet shall have a minimum spray angle of 15 °.

Verification

The spray angle shall be measured using an angle measuring device.

4.3 Hydraulic characteristics

4.3.1 General

Unless otherwise specified, tests shall be carried out at the reference pressure p_R, after the tests specified in EN 15182-1:–[1)], in the following order:

— 4.2.3 jet spay angle,

— 4.3.2 flow rates,

— 4.3.3 throw,

— 4.3.4 pressure control for type 4 branchpipes,

— 4.4 leak-tightness,

— 4.5 hydrostatic behaviour.

The following pressures shall be used for determining the hydraulic characteristics:

— reference pressure: p_R = 6 bar ± 0,1 bar;

— nominal pressure: p_N = 16 bar;

— test pressure: p_t = 25,5 bar;

— burst pressure : p_B = 60 bar.

NOTE No requirements are given concerning water distribution as it was not possible to obtain interpretable and conclusive data with the test equipment available at the time this document was written.

4.3.2 Flow rates

All flow rates indicated on the branchpipe shall be measured at straight jet and/or at the spray jet.

Table 3 shall apply to deviations in flow rates which can be set at the reference pressure p_R.

Table 3 — Deviation in the flow rate

Flow rate, Q l/min	**Deviation limit**
≤ 50	The flow rate shall be less than 75 l/min
> 50 to ≤ 250	(- 0/+25) l/min
> 250	(- 0/+ 10) % (of set rate)

Verification

Measurement.

4.3.3 Effective throw

The combination branchpipes shall achieve, for each flow rate position above 50 l/min, an effective throw d_{eff} as shown in Figure 1 when set to a straight jet at the reference pressure.

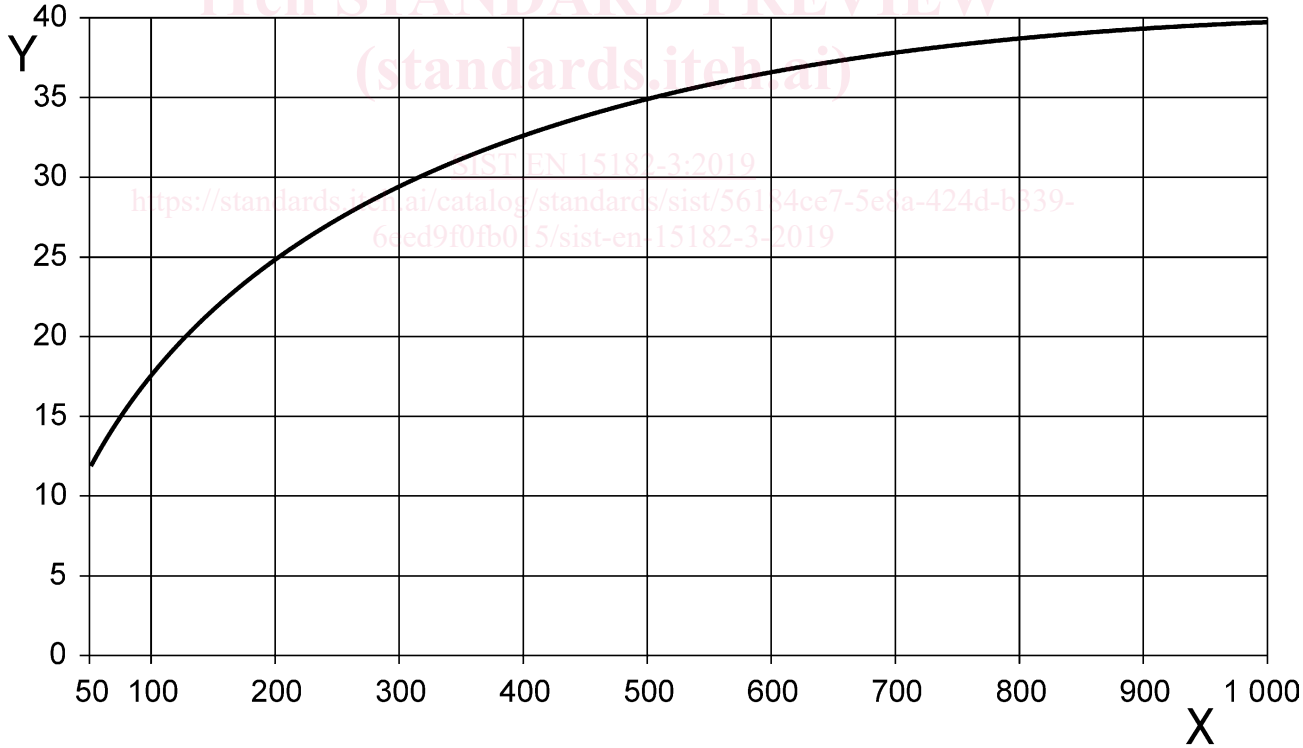

Key

X flow rate Q in l/min

Y effective throw d_{eff} in m

Figure 1 — Effective throw

Verification

The effective throw shall be measured under the following conditions, in compliance with the Figure 2:

— *effective throw: latest droplets - 10 % =* d_{eff} *= 0,9* d_{max} *;*

— *pressure at the inlet of the branchpipe:* p_R *;*

— *inclination: (30 ± 0,5) °;*

— *height: (1 ± 0,01) m (as per drawing);*

— *maximum wind speed: 2 m/s (Beaufort scale 3).*

The measurement shall be carried out when the system is stabilised.

The maximum throw shall be given in the instruction handbook.

Dimensions in millimetres

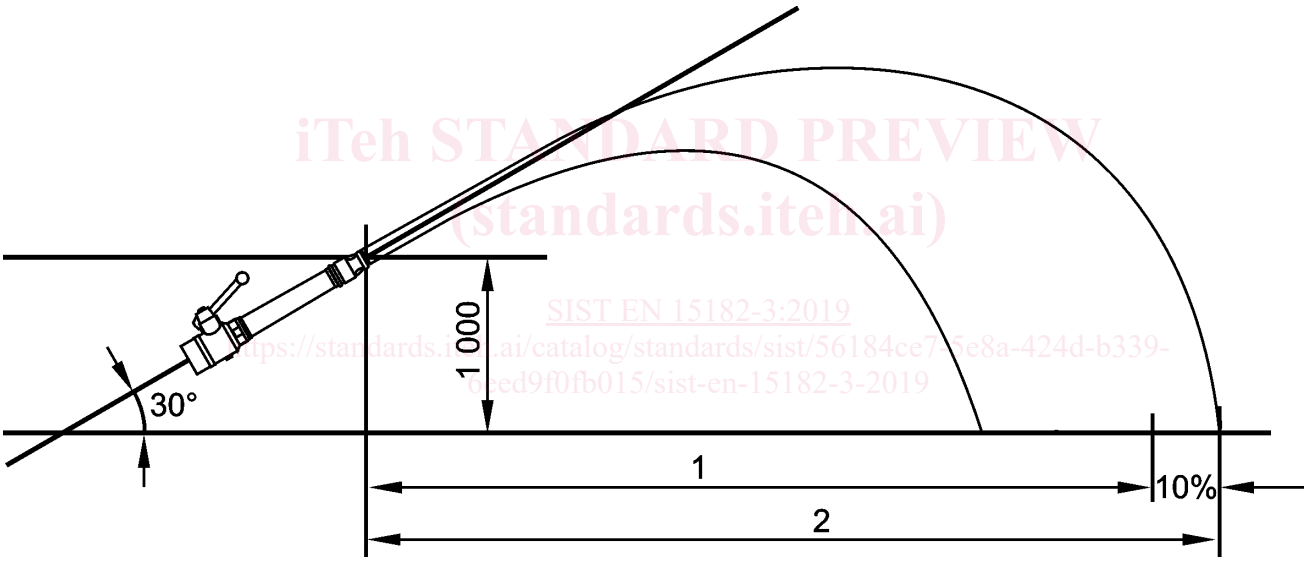

Key

1 d_{eff}

2 d_{max}

Figure 2 — Measurement of the effective throw

4.4 Leak-tightness

The branchpipe shall be constructed to ensure it does not leak during normal operation.

Verification

The closed branchpipe with the exit orifice not obstructed shall show no leakage during 1 min at the test pressure p_t *= 25,5 bar.*

Once the branchpipe is closed at 25,5 bar it shall not be operated anymore until the end of the test.