SLOVENSKI STANDARD
oSIST prEN ISO 13287:2018

01-november-2018

Osebna varovalna oprema - Obutev - Preskusna metoda za ugotavljanje upornosti zdrsa (ISO/DIS 13287:2018)

Personal protective equipment - Footwear - Test method for slip resistance (ISO/DIS 13287:2018)

Persönliche Schutzausrüstung - Schuhe - Prüfverfahren zur Bestimmung der Rutschhemmung (ISO/DIS 13287:2018)

Équipement de protection individuelle - Chaussures - Méthode d'essai pour la résistance au glissement (ISO/DIS 13287:2018)

iTeh STANDARD PREVIEW
(standards.iteh.ai)
SIST EN ISO 13287:2020
https://standards.iteh.ai/catalog/standards/sist/7f9d989c-7a48-4fbc-9531-63f7b4b2051f/sist-en-iso-13287-2020

Ta slovenski standard je istoveten z: prEN ISO 13287

ICS:

13.340.50 Varovanje nog in stopal Leg and foot protection

oSIST prEN ISO 13287:2018 en

2003-01.Slovenski inštitut za standardizacijo. Razmnoževanje celote ali delov tega standarda ni dovoljeno.

oSIST prEN ISO 13287:2018

iTeh STANDARD PREVIEW
(standards.iteh.ai)

SIST EN ISO 13287:2020
https://standards.iteh.ai/catalog/standards/sist/7f9d989c-7a48-4fbc-9531-63f7b4b2051f/sist-en-iso-13287-2020

oSIST prEN ISO 13287:2018

DRAFT INTERNATIONAL STANDARD

ISO/DIS 13287

ISO/TC **94**/SC **3**

Secretariat: **BSI**

Voting begins on:
2018-07-27

Voting terminates on:
2018-10-19

Personal protective equipment — Footwear — Test method for slip resistance

Équipement de protection individuelle — Chaussures — Méthode d'essai pour la résistance au glissement

ICS: 13.340.50

iTeh STANDARD PREVIEW
(standards.iteh.ai)

SIST EN ISO 13287:2020
https://standards.iteh.ai/catalog/standards/sist/7f9d989c-7a48-4fbc-9531-63f7b4b2051f/sist-en-iso-13287-2020

THIS DOCUMENT IS A DRAFT CIRCULATED FOR COMMENT AND APPROVAL. IT IS THEREFORE SUBJECT TO CHANGE AND MAY NOT BE REFERRED TO AS AN INTERNATIONAL STANDARD UNTIL PUBLISHED AS SUCH.

IN ADDITION TO THEIR EVALUATION AS BEING ACCEPTABLE FOR INDUSTRIAL, TECHNOLOGICAL, COMMERCIAL AND USER PURPOSES, DRAFT INTERNATIONAL STANDARDS MAY ON OCCASION HAVE TO BE CONSIDERED IN THE LIGHT OF THEIR POTENTIAL TO BECOME STANDARDS TO WHICH REFERENCE MAY BE MADE IN NATIONAL REGULATIONS.

RECIPIENTS OF THIS DRAFT ARE INVITED TO SUBMIT, WITH THEIR COMMENTS, NOTIFICATION OF ANY RELEVANT PATENT RIGHTS OF WHICH THEY ARE AWARE AND TO PROVIDE SUPPORTING DOCUMENTATION.

This document is circulated as received from the committee secretariat.

ISO/CEN PARALLEL PROCESSING

Reference number
ISO/DIS 13287:2018(E)

© ISO 2018

oSIST prEN ISO 13287:2018

iTeh STANDARD PREVIEW
(standards.iteh.ai)

SIST EN ISO 13287:2020
https://standards.iteh.ai/catalog/standards/sist/7f9d989c-7a48-4fbc-9531-63f7b4b2051f/sist-en-iso-13287-2020

COPYRIGHT PROTECTED DOCUMENT

© ISO 2018

All rights reserved. Unless otherwise specified, or required in the context of its implementation, no part of this publication may be reproduced or utilized otherwise in any form or by any means, electronic or mechanical, including photocopying, or posting on the internet or an intranet, without prior written permission. Permission can be requested from either ISO at the address below or ISO's member body in the country of the requester.

ISO copyright office
CP 401 • Ch. de Blandonnet 8
CH-1214 Vernier, Geneva
Phone: +41 22 749 01 11
Fax: +41 22 749 09 47
Email: copyright@iso.org
Website: www.iso.org

Published in Switzerland

oSIST prEN ISO 13287:2018

Contents

Page

Foreword ..... **iv**

1 Scope **1**

2 Normative references **1**

3 Terms and definitions **1**

4 Apparatus and materials **2**

5 Sampling and conditioning **4**
5.1 Sampling 4
5.2 Conditioning 4

6 Test method **4**
6.1 Principle 4
6.2 Test modes and test conditions 5

7 Preparation of footwear and floor **9**
7.1 Footwear 9
7.2 Floor 11

8 Procedure **11**

9 Test report **12**

Annex A (normative) **Standard shoemaking last and mechanical foot for testing footwear** **14**

Annex B (normative) **Specification of Eurotile 2 (OFIR)** **16**

Annex C (normative) **Calibration procedure for Eurotile 2 and other test surfaces** **19**

Bibliography **23**

iTeh STANDARD PREVIEW
(standards.iteh.ai)
SIST EN ISO 13287:2020
https://standards.iteh.ai/catalog/standards/sist/7f9d989c-7a48-4fbc-9531-63f7b4b2051f/sist-en-iso-13287-2020

© ISO 2018 – All rights reserved

Foreword

ISO (the International Organization for Standardization) is a worldwide federation of national standards bodies (ISO member bodies). The work of preparing International Standards is normally carried out through ISO technical committees. Each member body interested in a subject for which a technical committee has been established has the right to be represented on that committee. International organizations, governmental and non-governmental, in liaison with ISO, also take part in the work. ISO collaborates closely with the International Electrotechnical Commission (IEC) on all matters of electrotechnical standardization.

The procedures used to develop this document and those intended for its further maintenance are described in the ISO/IEC Directives, Part 1. In particular the different approval criteria needed for the different types of ISO documents should be noted. This document was drafted in accordance with the editorial rules of the ISO/IEC Directives, Part 2 (see www.iso.org/directives).

Attention is drawn to the possibility that some of the elements of this document may be the subject of patent rights. ISO shall not be held responsible for identifying any or all such patent rights. Details of any patent rights identified during the development of the document will be in the Introduction and/or on the ISO list of patent declarations received (see www.iso.org/patents).

Any trade name used in this document is information given for the convenience of users and does not constitute an endorsement.

For an explanation on the voluntary nature of standards, the meaning of ISO specific terms and expressions related to conformity assessment, as well as information about ISO's adherence to the World Trade Organization (WTO) principles in the Technical Barriers to Trade (TBT) see the following URL: www.iso.org/iso/foreword.html.

iTeh STANDARD PREVIEW
(standards.iteh.ai)

This document was prepared by Technical Committee ISO/TC 94 Personal Safety – Personal protective equipment, Subcommittee SC 3 Foot protection.

SIST EN ISO 13287:2020
en-iso-13287-2020

This third edition cancels and replaces the second edition (ISO 13287:2012), which has been technically revised.

The main changes compared to the previous edition are as follows:

- Clause 4.10 et al, including Figures 1, 3 and C.1 – the design and use of the rigid wedge is more precisely defined;
- New Figure 2 added for curved outsoles;
- Clause 5.2 – conditioning time is reduced;
- Clause 6.2.3 – normal force to be maintained throughout the test;
- Clause 7.1.3 – testing polyurethane soles;
- Clauses 7.1.3, 7.1.4, 7.1.7, 7.2.4, 7.2.5 and 7.2.6 sample conditioning, cleaning and replacement revised;
- Annex B replaces two previous annexes due to the deletion of Eurotile 1; B.2 is a new addition.

© ISO 2018 – All rights reserved

oSIST prEN ISO 13287:2018

Personal protective equipment — Footwear — Test method for slip resistance

1 Scope

This International Standard specifies a method of test for the slip resistance of PPE footwear including overshoes such as electrically insulating overshoes, which are worn over other footwear. It is not applicable to special purpose footwear containing spikes, metal studs or similar.

NOTE 1 Footwear claiming 'slip resistance' would be deemed an item of personal protective equipment.

NOTE 2 For product development purposes, sole units, outsoles or other soling components such as top pieces may be tested.

2 Normative references

The following documents, in whole or in part, are normatively referenced in this document and are indispensable for its application. For dated references, only the edition cited applies. For undated references, the latest edition of the referenced document (including any amendments) applies.

iTeh STANDARD PREVIEW
(standards.iteh.ai)

ISO 4287, *Geometrical Product Specifications (GPS) — Surface texture: Profile method — Terms, definitions and surface texture parameters*

ISO 4662, *Rubber, vulcanized or thermoplastic — Determination of rebound resilience*

SIST EN ISO 13287:2020
https://standards.iteh.ai/catalog/standards/sist/7f9d989c-7a48-4fbc-9531-63f7b4b2051f/sist-en-iso-13287-2020

3 Terms and definitions

For the purposes of this International Standard, the following terms and definitions apply.

3.1
normal force
force applied to the surface through the footwear, perpendicular (90°) to the surface

Note 1 to entry: The force includes the weight of the footwear, shoemaking last (4.1.1 or 4.1.2) or mechanical foot (4.1.3) and mounting.

3.2
frictional force
force parallel to the surface and against the direction of movement arising when footwear slides over a surface

3.3
coefficient of friction
CoF
ratio of the frictional force divided by the normal force

3.4
static contact time
time between initial contact of the footwear with the surface achieving a normal force of 50 N and the beginning of movement

3.5
measurement period
time interval during which the frictional force measurement is taken and during which the test conditions are satisfied

© ISO 2018 – All rights reserved

oSIST prEN ISO 13287:2018

3.6
floor
material (flooring), without contaminant (lubricant), to be used as the test surface

3.7
surface
floor, with or without contaminant (lubricant), against which the footwear is tested

3.8
calibration test value
CTV
coefficient of friction between the Slider 96[1)] and the test surface

4 Apparatus and materials

4.1 One or more of the following foot forms to hold the item of footwear to be tested.

4.1.1 Standard shoemaking last, conforming to Clause A.1.

4.1.2 Manufacturer's shoemaking last used to make the footwear sample to be tested, if required.

4.1.3 Mechanical foot, conforming to the dimensions given in Clause A.2.

iTeh STANDARD PREVIEW
(standards.iteh.ai)

4.2 Mechanism for lowering the item of footwear onto the surface and applying the required normal force at the required time in accordance with Clause 6.

4.3 Device for measuring the normal force between the footwear and surface when setting up the test and during the measurement period to an accuracy of 2 % or better.

https://standards.iteh.ai/catalog/standards/sist/7f9d989c-7a48-4fbc-9531-63f7b4b2051f/sist-13287-2020

4.4 Steel floor, consisting of a stainless steel plate.

NOTE 1 For example, steel Number 1.4301, Type 2G (cold rolled, ground) conforming to EN 10088-2:2005.

Surface roughness shall be measured in the area where the slip measurements are actually made. Measurements shall be made at 10 locations within this area and in the direction parallel to the sliding movement. At each location, measurements shall be made with a sampling length of 0,8 mm, taking five sampling lengths per location (evaluation length 4,0 mm).

The average roughness, R_z, shall be measured in accordance with ISO 4287. The overall mean value from all 10 locations shall be for R_z between 1,6 µm and 2,5 µm.

When the roughness parameter does not conform to the above specifications, the steel shall be prepared using silicon carbide abrasive paper or cloth for polishing in a backwards and forwards, linear motion, using a succession of reducing grit sizes. The polishing direction of each operation shall be perpendicular to the preceding operation with the final direction being parallel to the test direction. The preparation shall continue until the roughness parameter falls within the above specifications. New steel floor plates shall also be prepared by this method.

NOTE 2 Grit sizes 100 to 600 can be suitable.

4.5 Pressed ceramic tile floor, as specified in Annex B. The tiles shall not be modified in any way, for example, by mechanical or chemical treatment other than as allowed in Annex B.2.

---

1) Slider 96 is the trade name of a product supplied by Smithers Rapra. For contact details please visit http://isotc.iso.org/livelink/livelink?func=ll&objId=8867539&objAction=browse&sort=name. This information is given for the convenience of users of this document and does not constitute an endorsement by ISO of the product named. Equivalent products may be used if they can be shown to lead to the same results.

 © ISO 2018 – All rights reserved

oSIST prEN ISO 13287:2018

4.6 Other floors-lubricant conditions, for example, wood, concrete, stone and polymeric flooring, and lubricants may be used. The floor/lubricant combination used shall be characterized by determining the coefficient of friction in accordance with Annex C.

4.7 Mechanism for inducing movement between the footwear and the surface at a time and speed as specified in Clause 6.

4.8 Device for measuring the frictional force between the footwear and surface during the measurement period to an accuracy of 2 % or better.

4.9 Silicon carbide paper, 400 grit size, mounted on a rigid block with a flat face measuring 100 mm × 70 mm and mass (1 200 ± 120) g.

NOTE This can be achieved using steel to make a block 22 mm thick.

4.10 Rigid wedges having a (7,0 ± 0,5)° angle for setting the contact angle. The tip of the wedge (Figure 1) shall be truncated to a maximum height of 0.5 mm as judged by graduated eyepiece or equivalent means. The width of the wedge should be sufficient to ensure that the full width of the heel or forepart shall be fully supported by the wedge. For the heel test, the length shall be sufficient to support the full length of the heel but shall not make contact with the forepart [see Figure 3a)]. For the forepart test, the length of the wedge shall be sufficient to support the heel and forepart of the shoe [see Figure 3b)].

The purpose of the wedge when used in 6.2.2 and C.4.3 is to ensure that the test footwear or specimen S96 is elevated by no more than approximately 1 mm above the test surface when the contact angle is being set. To further facilitate this, the wedge may be marked with a line parallel to, and approximately 4 mm from, the truncated edge at the position where the wedge has a height of 1 mm, as shown in Figure 1.

iTeh Standards (https://standards.iteh.ai) Document Preview
SIST EN ISO 13287:2020
https://standards.iteh.ai/catalog/standards/sist/7f9d989c-7a49-4b8c-9531-62f7b4b20514/sist-en-iso-13287-2020

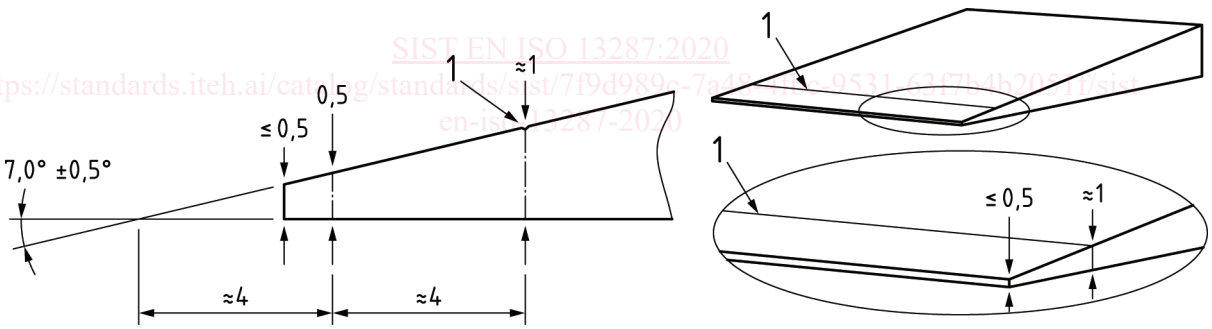

Key

1 Marked line

Figure 1 — 7° wedge with line scribed approximately 4 mm from truncated edge

4.11 Glycerol aqueous solution with a viscosity of (0,2 ± 0,1) Pa·s. At 23 °C this corresponds to an aqueous solution containing a mass fraction of approximately 85,6 % to 92,8 % glycerol. For other temperatures, see Table 1 (values for temperatures in the range given in Table 1 may be interpolated). The solution shall be replaced 30 min after exposure to the ambient atmosphere unless it can be shown to still comply with Table 1.

NOTE As a solution containing a mass fraction of approximately 90 % glycerol is hygroscopic in air with a relative humidity of more than 32 %, it is advisable to use solutions with a mass fraction of approximately 90,0 % to 92,5 % glycerol.

© ISO 2018 – All rights reserved

oSIST prEN ISO 13287:2018

Table 1 — Approximate concentrations of glycerol in demineralized water for different temperatures and viscosities

Temperature °C	Concentration and refractive index of glycerol in demineralized water for					
	0,1 Pa·s		0,2 Pa·s		0,3 Pa·s	
	Mass fraction %	Refractive index	Mass fraction %	Refractive index	Mass fraction %	Refractive index
21,0	84,5	1,450 0	89,5	1,457 4	91,9	1,461 0
23,0	85,6	1,450 9	90,4	1,458 4	92,8	1,462 0
25,0	86,6	1,451 2	91,4	1,459 4	93,7	1,462 8

4.12 Detergent solution, containing a mass fraction of 0,5 % sodium lauryl sulfate (SLS) in demineralized water.

4.13 Ethanol solution, containing a mass fraction of (50 ± 5) % ethanol GPR (CAS 64-17-5), which may be prepared from industrial methylated spirits GPR containing minimum 90 % ethanol, in demineralized water.

4.14 Propanone (acetone) (CAS Number 67-64-1), general laboratory grade.

5 Sampling and conditioning

iTeh STANDARD PREVIEW
(standards.iteh.ai)

5.1 Sampling

Unless otherwise specified, use a minimum of two samples of the same type of footwear of the same size.

5.2 Conditioning

SIST EN ISO 13287:2020
https://standards.iteh.ai/catalog/standards/sist/7f9d989c-7a48-4fbc-9531-63f7b4b2051f/sist-en-iso-13287-2020

The test items shall be conditioned prior to the test at (23 ± 2) °C and (50 ± 5) % RH for a minimum of 24 h. If necessary, the sample may be removed from this standard atmosphere provided that its temperature is maintained at (23 ± 2) °C, that testing starts within 30 min after removal from this standard atmosphere and that the testing is carried out at (23 ± 2) °C.

6 Test method

6.1 Principle

The item of footwear to be tested is put on a surface, subjected to a given normal force, and moved horizontally relative to the surface (or the surface is moved horizontally relative to the item of footwear). Both the frictional force and normal force are measured and the dynamic CoF is calculated.

For each of the required measurements performed in accordance with this standard, a corresponding estimate of the uncertainty of measurement should be evaluated. One of the following approaches shall be used:

— a statistical method, e.g. that given in ISO 5725-2 [2];

— a mathematical method, e.g. that given in ISO/IEC Guide 98-3 [3];

— uncertainty and conformity assessment as given in ISO/IEC Guide 98-4 [4];

— JCGM 100:2008[5]

 © ISO 2018 – All rights reserved

oSIST prEN ISO 13287:2018

6.2 Test modes and test conditions

6.2.1 The footwear shall be tested in one or more of the following modes (see Figure 3):

a) forward heel slip at angled contact;

b) backward slip on the forepart;

c) forward flat slip.

NOTE The heel test mode is considered the most important test mode in relation to reducing the risk of pedestrian slip.

6.2.2 For the heel and forepart test modes, the footwear shall be fitted onto a shoemaking last (4.1.1 or 4.1.2). The inside tangent of the shoemaking last, as defined by a straight line placed against the heel and joint swell on the inside of the shoemaking last (line A-B in Figure 4), shall be aligned parallel to the direction of sliding movement (see Figure 4).

In the heel test mode the footwear moves forward in the heel to toe direction. The contact angle between the bottom of the main area of the heel, not including the any profile or chamfer at the rear edge of the heel, and the floor shall be (7,0 ± 0,5)° (see Figure 3a), determined using a rigid wedge (4.10) placed on the floor, the leading edge of the wedge shall be orthogonal to the direction of sliding movement. The shoemaking last, with the footwear mounted on it, shall be lowered onto the wedge under its own weight and adjusted until the footwear heel sits flat on the angled face of the wedge with approximately 4 mm of the wedge extending beyond the rearmost contact point of the heel with the face of the wedge. The footwear forepart shall not contact the surface or the rigid wedge.

NOTE For footwear with curved outsoles, set the angle of the shoemaking last such that the vertex is approximately the foremost point of contact between the outsole and the floor under full vertical load, see Figure 2. The vertex is the central point of contact between the outsole and floor when the footwear is rested horizontally on the floor without additional load (i.e. without last).

iTeh STANDARD PREVIEW
(standards.iteh.ai)
https://standards.iteh.ai/catalog/standards/sist/7f9d989c-7a48-4fbc-9531-631b4b2051f/sist-en-iso-13287-2020

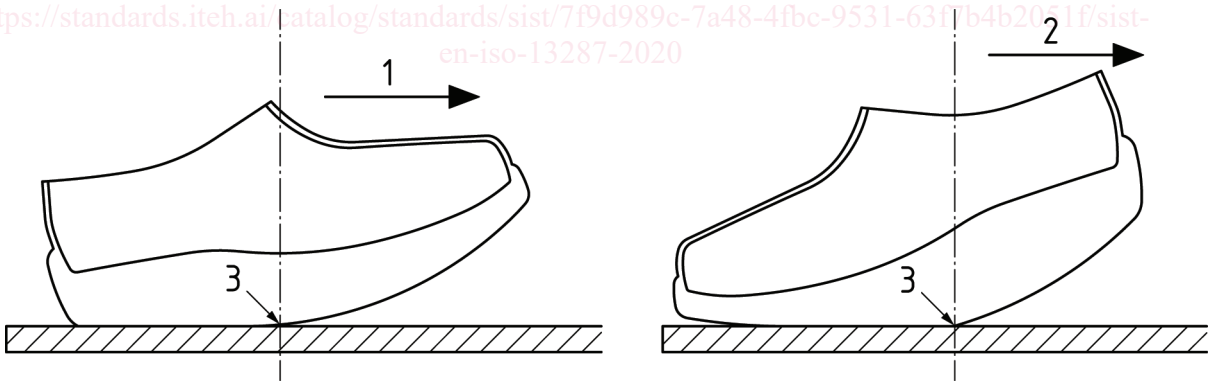

Key

1 Direction of movement of shoe relative to surface: forward heel test mode

2 Direction of movement of shoe relative to surface: backward forepart test mode

3 Vertex of curved outsole

Figure 2 — Mounting footwear having curved outsole

In the forepart test mode the footwear moves backwards in the toe to heel direction. The contact angle between the bottom of the shoe and the floor shall be (7,0 ± 0,5)° (see Figure 3b) determined using a rigid wedge (4.10) placed on the floor. The shoemaking last (4.1.1 or 4.1.2), with the footwear mounted on it, shall be lowered onto the wedge under its own weight and adjusted until the footwear bottom sits flat on the angled face of the wedge with approximately 4 mm of the wedge extending beyond the foremost contact point of the forepart with the face of the wedge.

© ISO 2018 – All rights reserved