SLOVENSKI STANDARD
SIST EN 2876:2019

01-maj-2019

Aeronavtika - Matice, šestrobe, drsne, zmanjšana višina, z normalnim zevom ključa, iz aluminijeve litine, anodizirane - Klasifikacija: 450 MPa (pri okoljski temperaturi)/120 °C

Aerospace series - Nuts, hexagon, plain, reduced height, normal across flats, in aluminium alloy, anodized - Classification: 450 MPa (at ambient temperature)/120 °C

Luft- und Raumfahrt - Flache Sechskantmuttern, normale Schlüsselweiten, aus Aluminiumlegierung, anodisiert - Klasse: 450 MPa (bei Raumtemperatur)/120 °C

Série aérospatiale - Écrous hexagonaux ordinaires, hauteur réduite, surplats normaux, en alliage d'aluminium, anodisés - Classification: 450 MPa (à température ambiante)/120 °C

Ta slovenski standard je istoveten z: EN 2876:2019

ICS:

49.030.30 Matice Nuts

SIST EN 2876:2019 en,fr,de

EUROPEAN STANDARD
NORME EUROPÉENNE
EUROPÄISCHE NORM

EN 2876

March 2019

ICS 49.030.30

English Version

Aerospace series - Nuts, hexagon, plain, reduced height, normal across flats, in aluminium alloy, anodized - Classification: 450 MPa (at ambient temperature)/120 °C

Série aérospatiale - Écrous hexagonaux ordinaires, hauteur réduite, surplats normaux, en alliage d'aluminium, anodisés - Classification: 450 MPa (à température ambiante)/120 °C

Luft- und Raumfahrt - Flache Sechskantmuttern, normale Schlüsselweiten, aus Aluminiumlegierung, anodisiert - Klasse: 450 MPa (bei Raumtemperatur)/120 °C

This European Standard was approved by CEN on 15 July 2018.

CEN members are bound to comply with the CEN/CENELEC Internal Regulations which stipulate the conditions for giving this European Standard the status of a national standard without any alteration. Up-to-date lists and bibliographical references concerning such national standards may be obtained on application to the CEN-CENELEC Management Centre or to any CEN member.

This European Standard exists in three official versions (English, French, German). A version in any other language made by translation under the responsibility of a CEN member into its own language and notified to the CEN-CENELEC Management Centre has the same status as the official versions.

CEN members are the national standards bodies of Austria, Belgium, Bulgaria, Croatia, Cyprus, Czech Republic, Denmark, Estonia, Finland, Former Yugoslav Republic of Macedonia, France, Germany, Greece, Hungary, Iceland, Ireland, Italy, Latvia, Lithuania, Luxembourg, Malta, Netherlands, Norway, Poland, Portugal, Romania, Serbia, Slovakia, Slovenia, Spain, Sweden, Switzerland, Turkey and United Kingdom.

EUROPEAN COMMITTEE FOR STANDARDIZATION
COMITÉ EUROPÉEN DE NORMALISATION
EUROPÄISCHES KOMITEE FÜR NORMUNG

CEN-CENELEC Management Centre: Rue de la Science 23, B-1040 Brussels

Contents Page

European foreword

This document (EN 2876:2019) has been prepared by the Aerospace and Defence Industries Association of Europe - Standardization (ASD-STAN).

After enquiries and votes carried out in accordance with the rules of this Association, this Standard has received the approval of the National Associations and the Official Services of the member countries of ASD, prior to its presentation to CEN.

This European Standard shall be given the status of a national standard, either by publication of an identical text or by endorsement, at the latest by September 2019, and conflicting national standards shall be withdrawn at the latest by September 2019.

Attention is drawn to the possibility that some of the elements of this document may be the subject of patent rights. CEN shall not be held responsible for identifying any or all such patent rights.

According to the CEN-CENELEC Internal Regulations, the national standards organizations of the following countries are bound to implement this European Standard: Austria, Belgium, Bulgaria, Croatia, Cyprus, Czech Republic, Denmark, Estonia, Finland, Former Yugoslav Republic of Macedonia, France, Germany, Greece, Hungary, Iceland, Ireland, Italy, Latvia, Lithuania, Luxembourg, Malta, Netherlands, Norway, Poland, Portugal, Romania, Serbia, Slovakia, Slovenia, Spain, Sweden, Switzerland, Turkey and the United Kingdom.

1 Scope

This European standard specifies the characteristics of hexagonal plain nuts, reduced height, normal across flats, in aluminium alloy, anodized, for aerospace applications.

Classification: 450 MPa[1]/120 °C[2].

2 Normative references

The following documents are referred to in the text in such a way that some or all of their content constitutes requirements of this document. For dated references, only the edition cited applies. For undated references, the latest edition of the referenced document (including any amendments) applies.

EN 2284, *Aerospace series — Sulphuric acid anodizing of aluminium and wrought aluminium alloys*

EN 2424, *Aerospace series — Marking of aerospace products*[3]

EN 9100, *Quality Management Systems — Requirements for Aviation, Space and Defence Organizations*

ISO 5855-2, *Aerospace — MJ threads — Part 2: Limit dimensions for bolts and nuts*

ISO 8788, *Aerospace — Nuts, metric — Tolerances of form and position*

ISO 9139, *Aerospace — Nuts, plain and slotted (castellated) — Procurement specification*

ISO 9609, *Aerospace — Nuts, hexagonal, plain, reduced height, normal across flats, with MJ threads, classifications: 450 MPa (at ambient temperature)/120 °C, 450 MPa (at ambient temperature)/235 °C, 600 MPa (at ambient temperature)/425 °C, 900 MPa (at ambient temperature)/235 °C, 900 MPa (at ambient temperature)/315 °C, 900 MPa (at ambient temperature)/650 °C, 1 100 MPa (at ambient temperature)/235 °C, 1 100 MPa (at ambient temperature)/730 °C and 1 250 MPa (at ambient temperature)/600 °C — Dimensions*

TR 3823-002, *Aerospace series — Materials for plain, slotted and self-locking by plastic ring hexagonal nuts*[3]

3 Terms and definitions

No terms and definitions are listed in this document.

ISO and IEC maintain terminological databases for use in standardization at the following addresses:

— ISO Online browsing platform: available at http://www.iso.org/obp

— IEC Electropedia: available at http://www.electropedia.org/

---

1 Corresponds to the minimum tensile stress which the nut is able to withstand at ambient temperature without breaking or cracking when tested with a bolt of a higher strength class.

2 Maximum temperature that the nut is able to withstand, without permanent alteration to its original characteristics, after ambient temperature has been restored. The maximum temperature is conditioned by the material.

3 Published as ASD-STAN Technical Report at the date of publication of this European standard by AeroSpace and Defence industries Association of Europe - Standardization (ASD-STAN) (www.asd-stan.org).

4 Required characteristics

4.1 Configuration — Dimensions — Masses

See Figure 1 and Table 1.

Dimensions and tolerances are in conformity with ISO 9609, expressed in millimetres and apply after surface treatment.

Detail of form not stated are at the manufacturer's option.

4.2 Tolerances of form and position

ISO 8788.

4.3 Materials

TR 3823-002.

4.4 Surface treatment

EN 2284.

6,3 (1,6)[1]

Remove sharp edges 0,1 to 0,4

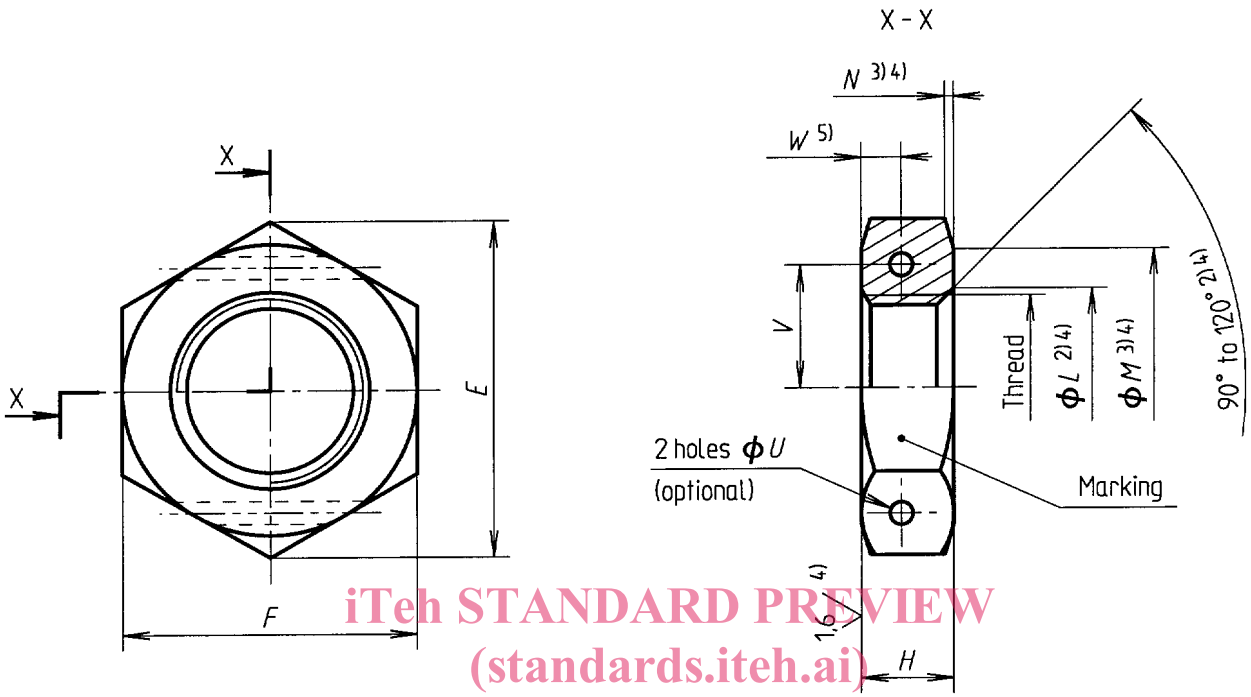

Key

1) These values in micrometres apply before surface treatment. They do not apply to threads the surface texture of which will be as achieved by usual manufacturing methods.
2) all forms of entry (chamfer or radius) optional within these limiting dimensions
3) diameter *M* may be tangential to, but shall not intrude on the flats
4) applicable to both faces
5) from either face

Figure 1

Table 1

Diameter code	Thread[a]	*E* min	*F*		*H* h14	*L*		*M* min.	*N* max.	*N* min.	*U* H13	*V* ±0,2	*W* min.	Mass[b]
040	MJ4×0,7 – 4H6H	7,6	7	h12	2,6	4,2	+0,6 0	6,4	0,5	0,2	–	–	–	0,23
050	MJ5×0,8 – 4H6H	8,7	8		3	5,2		7,4			–	–	–	0,32
060	MJ6×1 – 4H5H	10,9	10	h13	3,5	6,3	+0,8 0	9,3			1	3,9	1,4	0,57
070	MJ7×1 – 4H5H	12	11		4	7,3		10,2				4,4	1,6	0,75
080	MJ8×1 – 4H5H	14,3	13			8,3		12,2				5		1,11
100	MJ10×1,25 – 4H5H	18,9	17		5	10,3		16	0,6	0,3	1,5	6,9	2,1	2,46
120	MJ12×1,25 – 4H5H	21,1	19		6	12,3		18				8	2,6	3,46
140	MJ14×1,5 – 4H5H	24,5	22		7	14,4		21				9,6	3,1	5,36
160	MJ16×1,5 – 4H5H	26,8	24		8	16,4		23				10,7	3,6	6,93
180	MJ18×1,5 – 4H5H	30,2	27		9	18,4		26				12	4,1	9,64
200	MJ20×1,5 – 4H5H	33,6	30		10	20,4		29				13,4	4,6	13,2
220	MJ22×1,5 – 4H5H	35,8	32		11	22,4		30,9				14,4	5	15,3
240	MJ24×2 – 4H5H	40,4	36		12	24,5		34,9				16,1	5,5	20,7

[a] In accordance with ISO 5855-2.

[b] Approximate values (kg/1 000 pieces), calculated on the basis of 2,83 kg/dm^3, given for information purposes only. They apply to nuts without holes.