SLOVENSKI STANDARD
oSIST prEN 12404:2019

01-januar-2019

Trajnost lesa in lesnih izdelkov - Ocena učinkovitosti sredstva za zaščito gradbenega materiala na preprečevanje širjenja sive hišne gobe Serpula lacrymans (Schumacher ex Fries) S.F. Gray na les - Laboratorijska metoda

Durability of wood and wood-based products - Assessment of the effectiveness of a masonry fungicide to prevent growth into wood of Dry Rot Serpula lacrymans (Schumacher ex Fries) S.F. Gray - Laboratory method

Dauerhaftigkeit von Holz und Holzprodukten - Bestimmung der Wirksamkeit eines Schutzmittels gegen das Überwachsen von Echtem Hausschwamm Serpula lacrymans (Schumacher ex Fries) S.F. Gray vom Mauerwerk auf das Holz - Laboratoriumsverfahren

Durabilité du bois et des matériaux dérivés du bois - Évaluation de l'efficacité d'un fongicide de maçonnerie pour empêcher le développement dans le bois de la mérule Serpula lacrymans (Schumacher ex Fries) S.F. Gray - Méthode de laboratoire

Ta slovenski standard je istoveten z: **prEN 12404**

ICS:

71.100.50 Kemikalije za zaščito lesa Wood-protecting chemicals

oSIST prEN 12404:2019 **en,fr,de**

EUROPEAN STANDARD

NORME EUROPÉENNE

EUROPÄISCHE NORM

DRAFT
prEN 12404

November 2018

ICS 71.100.50

Will supersede CEN/TS 12404:2015

English Version

Durability of wood and wood-based products - Assessment of the effectiveness of a masonry fungicide to prevent growth into wood of Dry Rot Serpula lacrymans (Schumacher ex Fries) S.F. Gray - Laboratory method

Durabilité du bois et des matériaux dérivés du bois - Évaluation de l'efficacité d'un fongicide de maçonnerie pour empêcher le développement dans le bois de la mérule Serpula lacrymans (Schumacher ex Fries) S.F. Gray - Méthode de laboratoire

Dauerhaftigkeit von Holz und Holzprodukten - Bestimmung der Wirksamkeit eines Schutzmittels gegen das Überwachsen von Echtem Hausschwamm Serpula lacrymans (Schumacher ex Fries) S.F. Gray vom Mauerwerk auf das Holz - Laboratoriumsverfahren

This draft European Standard is submitted to CEN members for enquiry. It has been drawn up by the Technical Committee CEN/TC 38.

If this draft becomes a European Standard, CEN members are bound to comply with the CEN/CENELEC Internal Regulations which stipulate the conditions for giving this European Standard the status of a national standard without any alteration.

This draft European Standard was established by CEN in three official versions (English, French, German). A version in any other language made by translation under the responsibility of a CEN member into its own language and notified to the CEN-CENELEC Management Centre has the same status as the official versions.

CEN members are the national standards bodies of Austria, Belgium, Bulgaria, Croatia, Cyprus, Czech Republic, Denmark, Estonia, Finland, Former Yugoslav Republic of Macedonia, France, Germany, Greece, Hungary, Iceland, Ireland, Italy, Latvia, Lithuania, Luxembourg, Malta, Netherlands, Norway, Poland, Portugal, Romania, Serbia, Slovakia, Slovenia, Spain, Sweden, Switzerland, Turkey and United Kingdom.

Recipients of this draft are invited to submit, with their comments, notification of any relevant patent rights of which they are aware and to provide supporting documentation.

Warning : This document is not a European Standard. It is distributed for review and comments. It is subject to change without notice and shall not be referred to as a European Standard.

EUROPEAN COMMITTEE FOR STANDARDIZATION
COMITÉ EUROPÉEN DE NORMALISATION
EUROPÄISCHES KOMITEE FÜR NORMUNG

CEN-CENELEC Management Centre: Rue de la Science 23, B-1040 Brussels

Contents

Page

European foreword

This document (prEN 12404:2018) has been prepared by Technical Committee CEN/TC 38 “Durability of wood and wood-based products”, the secretariat of which is held by AFNOR.

This document is currently submitted to the CEN Enquiry.

This document will supersede CEN/TS 12404:2015.

Introduction

This document describes a laboratory method of test for the assessment of the effectiveness of a masonry fungicide applied to masonry for the prevention of the growth of dry rot, Serpula lacrymans (Schumacher ex Fries) S.F. Gray into wood.

This laboratory method enables the determination of the concentration of a preservative within mortar which could prevent the dry rot fungus from growing through a given mortar layer treated with this preservative.

1 Scope

This document specifies a method for determining the performance of a preservative, applied to the upper surface of the mortar test specimens, in preventing the growth of dry rot through the treated mortar when exposed to the test fungus.

This method is only applicable to masonry fungicides applied as a true solution of the preservative in water or dilute oil in water emulsion. It is not applicable to rods, pastes and other similar preservative types. This method is applicable to preservatives applied to masonry by brushing, spraying and/or injection techniques or mixed into rendering and plastering mortar for masonry.

2 Normative references

The following documents are referred to in the text in such a way that some or all of their content constitutes requirements of this document. For dated references, only the edition cited applies. For undated references, the latest edition of the referenced document (including any amendments) applies.

EN 113:1996, *Wood preservatives - Test method for determining the protective effectiveness against wood destroying basidiomycetes - Determination of the toxic values*

EN 413-1, *Masonry cement – Part 1: Composition, specifications and conformity criteria*

EN 459-1, *Building lime - Part 1: Definitions, specifications and conformity criteria*

EN 599-1, *Durability of wood and wood-based products - Efficacy of preventive wood preservatives as determined by biological tests - Part 1: Specification according to use class*

EN ISO 3696, *Water for analytical laboratory use - Specification and test methods (ISO 3696)*

3 Terms and definitions

For the purposes of this document, the following terms and definitions apply.

ISO and IEC maintain terminological databases for use in standardization at the following addresses:

— IEC Electropedia: available at http://www.electropedia.org/

— ISO Online browsing platform: available at http://www.iso.org/obp

3.1
masonry fungicide
fungicidal/fungistatic product applied to masonry and other mineral construction materials to prevent the growth of dry rot through or over the treated material

3.2
performance
behaviour of the preservative product in terms of its effectiveness in test

3.3
preservative
formulated masonry fungicide in the form received from the supplier for the test

3.4
supplier
sponsor of the test

4 Principle

The preservative to be tested is applied by pipette (or in accordance with the sponsor's instruction) to the upper surface of mortar test specimens. The mortar test specimens are contained in rigid tubes and an untreated wooden sample is placed on top of these mortar test specimens. The bases of the mortar specimens are exposed to dry rot attack for a given time. The assessment of the performance of the test preservative consists of checking the growth of the fungus through the mortar and the evaluation of any attack of the wooden sample contained in the rigid tube.

5 Test materials

5.1 Test fungus:

5.1.1 Obligatory test fungus:

— Serpula lacrymans (Schumacher ex Fries) S.F. Gray, strain BAM Ebw.315.

5.1.2 Optional test fungi:

For specific regional uses or conditions, it is also possible to use other strains of dry rot (e.g. Serpula lacrymans FPRL 12 C) known to be capable of growing through masonry.

NOTE Other fungal species can grow through masonry. This method of test could be used to assess the ability of these fungi to grow through mortar specimens.

5.1.3 Maintenance of strains:

The strains shall be maintained and treated in accordance with the instructions from their laboratory of origin (see Annex A). If a strain shows signs of degeneration, it shall no longer be used and the testing laboratory shall obtain a new standard culture of the strain.

5.2 Products and reagents:

5.2.1 Water, distilled or deionized, conform to grade 3 of EN ISO 3696.

5.2.2 Malt – mineral salt – agar culture medium; consisting:

— malt extract	in concentrated form	12,50 g;
	or in powder form	10,00 g;
— agar causing no inhibition of growth of fungi		15,00 g;
— potassium dihydrogen phosphate (KH2PO4)		2,72 g;
— calcium sulfate dihydrate (CaSO4.2H2O)		0,38 g;
— magnesium sulfate heptahydrate (MgSO4.7H2O)		0,62 g;
— water (5.2.1) to make up to 1 000 ml.		

Place all the ingredients in a 1 000 ml beaker measure and gently heat, stirring occasionally, until completely dissolved.

Pour 150 ml of the culture medium into each culture vessel (5.3.1).

Close the vessels with screw cap without a hole a quarter of a turn less than full closure and sterilize the closed vessels in the autoclave (5.3.8) at (121 ± 2) °C for 30 min. Let them cool standing upright.

5.2.3 Nutrient solution, a mass fraction for 5 % aqueous solution of malt extract.

5.2.4 Equipment for chemical gas or for steam sterilization or access to a radiation source (see Annex B).

5.2.5 Carbon dioxide, compressed gas in cylinders.

5.2.6 Sodium chloride, saturated solution in water.

5.2.7 Portland cement, conforming to EN 413-1.

5.2.8 Hydrated building lime, conforming to EN 459-1.

5.2.9 Bricklaying mortar sand, quartz sand with a particle size equal to or less than 1 mm, washed under running tap water until the water is no longer turbid.

5.3 Apparatus:

5.3.1 Culture vessels:

Straight sided flat bottom glass culture vessels with an aperture of 50 mm to 60 mm (see Figure 3), provided with both screw caps without a hole, used for culturing the test fungus (9.1), and screw caps with a central hole equal in size to the outer diameter of the tube (5.3.2.) plus the thickness of the tubing (5.3.3.) in diameter.

NOTE The alternative type C.2 of test vessels described in EN 113 has been found to be suitable.

5.3.2 Rigid tubes, which can be sterilized using an autoclave (for example glass, or polyvinylidene fluoride) with an inner diameter of 35 mm to 46 mm and a length of at least 150 mm.

5.3.3 Tubing, with a diameter corresponding to the outer diameter of the rigid tubes (5.3.2.) with a wall thickness of (1,0 ± 0,5) mm and cut into lengths of (40,0 ± 1,0) mm capable of being sterilized using an autoclave.

NOTE Tubing made of rubber has been found to be suitable.

5.3.4 Inert supports of maximum thickness 3 mm and when in use, do not obscure more than 10 % of the mortar surface.

Stainless steel washers of overall diameter 25 mm have been found to be suitable. Two supports are required for each test assembly.

5.3.5 Conditioning chamber, well ventilated and controlled at (20 ± 2) °C and (65 ± 5) % relative humidity.

5.3.6 Culture chamber, dark and controlled at (22 ± 1) °C and (70 ± 5) % relative humidity.

5.3.7 Drying oven, capable of being controlled at (45 ± 1) °C.

5.3.8 Autoclave, adjustable to (121 ± 2) °C.

5.3.9 Containers, to prepare the mortar and the preservative solutions, made of a material that does not react with their contents.

5.3.10 Mortar mould apparatus, consisting of a plastic frame for example polyvinyl chloride (PVC) with a height of (10 ± 0,5) mm, a porous support (for example clay house building bricks, ceramic plates) to absorb the excess water in the fresh mortar and a cloth (for example muslin cloth, cheese cloth) with the same dimensions as the frame to aid demoulding the mortar specimens (see Figure 2).

5.3.11 Plastic lath, used to smooth the surface of the mortar after casting in the plastic frame.

5.3.12 Circular tamper with a flat base, a diameter of 3 mm to 5 mm to less than the internal diameter of the rigid tube (5.3.2), and at least 50 mm longer than the rigid tube.

5.3.13 Racks on which to place the treated mortar test specimens an example is shown in Figure 1.

Dimensions in millimetres

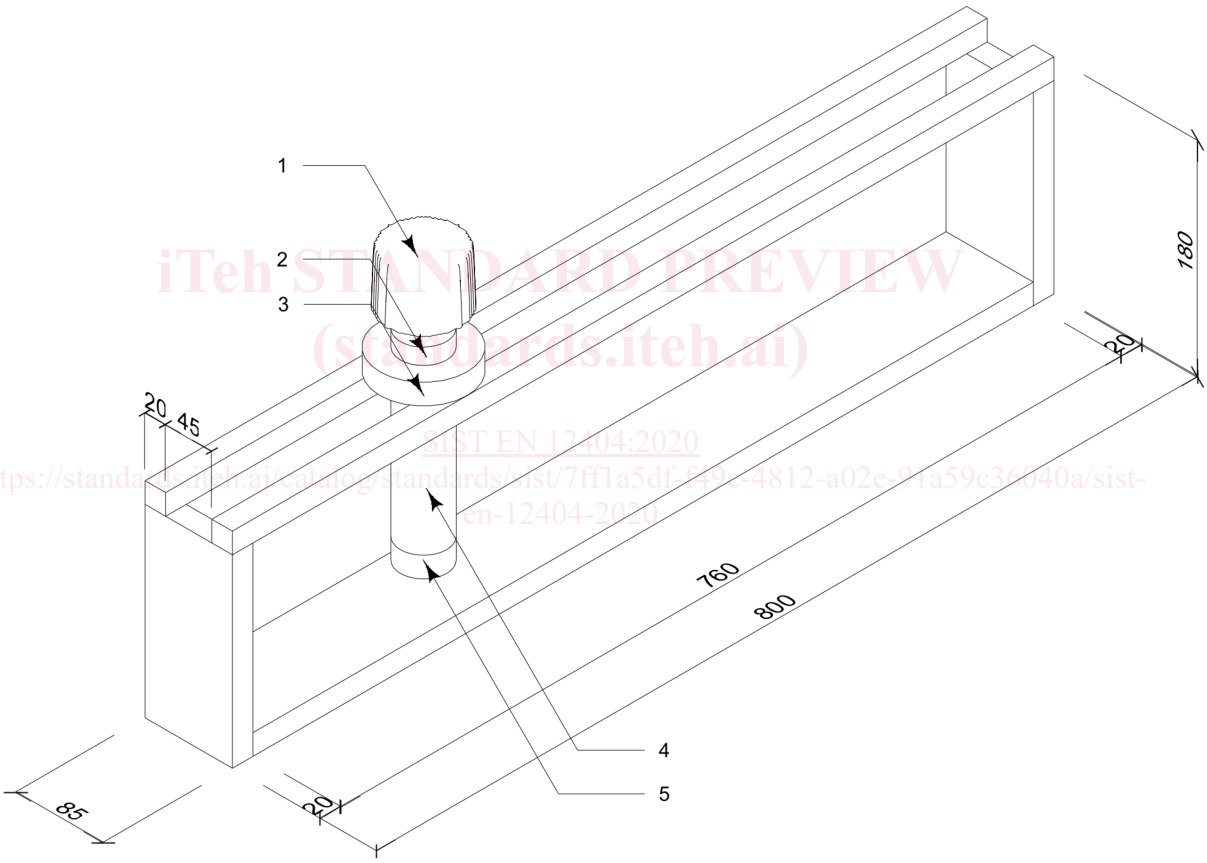

Key

1 wad of cotton wool
2 tubing
3 culture vessel screw cap
4 rigid tube
5 mortar specimen

Figure 1 — Example of a rack

5.3.14 Sterile single-use pipettes of (1,0 ± 0,1) ml content.