SLOVENSKI STANDARD
oSIST prEN ISO 21178:2019

01-julij-2019

Naprave za kontinuirni transport - Lahki trakovi tračnih transporterjev - Ugotavljanje električnih upornosti (ISO/DIS 21178:2019)

Light conveyor belts - Determination of electrical resistances (ISO/DIS 21178:2019)

Leichte Fördergurte - Bestimmung der elektrischen Widerstände (ISO/DIS 21178:2019)

Courroies transporteuses légères - Détermination des résistances électriques (ISO/DIS 21178:2019)

iTeh STANDARD PREVIEW
(standards.iteh.ai)
SIST EN ISO 21178:2020
https://standards.iteh.ai/catalog/standards/sist/36c0d47a-3c0e-473d-839c-5cc67e0e56f7/sist-en-iso-21178-2020

Ta slovenski standard je istoveten z: prEN ISO 21178

ICS:

53.040.20 Deli za transporterje Components for conveyors

oSIST prEN ISO 21178:2019 en,fr,de

2003-01.Slovenski inštitut za standardizacijo. Razmnoževanje celote ali delov tega standarda ni dovoljeno.

oSIST prEN ISO 21178:2019

iTeh STANDARD PREVIEW
(standards.iteh.ai)

SIST EN ISO 21178:2020
https://standards.iteh.ai/catalog/standards/sist/36a0d47e-3c0e-473d-839c-5cc67e0e56f7/sist-en-iso-21178-2020

oSIST prEN ISO 21178:2019

DRAFT INTERNATIONAL STANDARD

ISO/DIS 21178

ISO/TC **41**/SC **3**

Secretariat: **SAC**

Voting begins on:
2019-04-26

Voting terminates on:
2019-07-19

Light conveyor belts — Determination of electrical resistances

Courroies transporteuses légères — Détermination des résistances électriques

ICS: 53.040.10

iTeh STANDARD PREVIEW
(standards.iteh.ai)
SIST EN ISO 21178:2020
https://standards.iteh.ai/catalog/standards/sist/36a0d47e-3c0e-473d-839c-5cc67e0e56f7/sist-en-iso-21178-2020

THIS DOCUMENT IS A DRAFT CIRCULATED FOR COMMENT AND APPROVAL. IT IS THEREFORE SUBJECT TO CHANGE AND MAY NOT BE REFERRED TO AS AN INTERNATIONAL STANDARD UNTIL PUBLISHED AS SUCH.

IN ADDITION TO THEIR EVALUATION AS BEING ACCEPTABLE FOR INDUSTRIAL, TECHNOLOGICAL, COMMERCIAL AND USER PURPOSES, DRAFT INTERNATIONAL STANDARDS MAY ON OCCASION HAVE TO BE CONSIDERED IN THE LIGHT OF THEIR POTENTIAL TO BECOME STANDARDS TO WHICH REFERENCE MAY BE MADE IN NATIONAL REGULATIONS.

RECIPIENTS OF THIS DRAFT ARE INVITED TO SUBMIT, WITH THEIR COMMENTS, NOTIFICATION OF ANY RELEVANT PATENT RIGHTS OF WHICH THEY ARE AWARE AND TO PROVIDE SUPPORTING DOCUMENTATION.

This document is circulated as received from the committee secretariat.

ISO/CEN PARALLEL PROCESSING

Reference number
ISO/DIS 21178:2019(E)

© ISO 2019

oSIST prEN ISO 21178:2019

iTeh STANDARD PREVIEW
(standards.iteh.ai)

SIST EN ISO 21178:2020
https://standards.iteh.ai/catalog/standards/sist/36a0d47e-3c0e-473d-839c-5cc67e0e56f7/sist-en-iso-21178-2020

COPYRIGHT PROTECTED DOCUMENT

© ISO 2019

All rights reserved. Unless otherwise specified, or required in the context of its implementation, no part of this publication may be reproduced or utilized otherwise in any form or by any means, electronic or mechanical, including photocopying, or posting on the internet or an intranet, without prior written permission. Permission can be requested from either ISO at the address below or ISO's member body in the country of the requester.

ISO copyright office
CP 401 • Ch. de Blandonnet 8
CH-1214 Vernier, Geneva
Phone: +41 22 749 01 11
Fax: +41 22 749 09 47
Email: copyright@iso.org
Website: www.iso.org

Published in Switzerland

oSIST prEN ISO 21178:2019

Contents

Page

Foreword ... **v**

1 Scope ... **1**

2 Normative references ... **1**

3 Terms and definitions ... **1**

4 Symbols ... **2**

5 Electrical surface resistances ... **2**
5.1 Method A: measurement of surface resistance R_{OA} omni-directionally ... 2
5.2 Method B: measurement of surface resistance $\boldsymbol{R}_{OB}$ in longitudinal and transverse directions ... 6
5.2.1 Applicability ... 6
5.2.2 Principle ... 6
5.2.3 Apparatus (see Figure 4) ... 6
5.2.4 Test piece ... 7
5.2.5 Procedure ... 9
5.2.6 Expression of results ... 9
5.2.7 Test report ... 9

6 Electrical surface resistivity ρ_S ... **9**
6.1 General ... 9
6.2 Principle ... 9
6.3 Apparatus (see Figure 6) ... 10
6.4 Test piece ... 11
6.4.1 Material ... 11
6.4.2 Dimensions ... 11
6.4.3 Number ... 11
6.4.4 Cleaning ... 11
6.4.5 Conditioning ... 11
6.4.6 Preparation ... 11
6.5 Procedure ... 11
6.6 Expression of results ... 12
6.7 Test report ... 12

7 Electrical volume resistances ... **12**
7.1 Volume resistance R_D perpendicular to plane of belt ... 12
7.1.1 Principle ... 12
7.1.2 Apparatus (see Figure 8) ... 12
7.1.3 Test piece ... 13
7.1.4 Procedure ... 14
7.1.5 Expression of results ... 14
7.1.6 Test report ... 14
7.2 Volume resistance, R_{Di}, in longitudinal and transverse directions parallel to plane of belt ... 15
7.2.1 Principle ... 15
7.2.2 Apparatus (see Figure 9) ... 15
7.2.3 Test piece ... 16
7.2.4 Procedure ... 17
7.2.5 Expression of results ... 18
7.2.6 Test report ... 18

8 Electrical volume resistivity $\boldsymbol{\rho_D}$ ... **18**
8.1 Procedure ... 18
8.2 Expression of results ... 18
8.3 Test report ... 18

Annex A (informative) **Comparative values for electrical resistances** ... **20**

iTeh STANDARD PREVIEW
(standards.iteh.ai)
SIST EN ISO 21178:2020
https://standards.iteh.ai/catalog/standards/sist/36a0d47e-3c0e-473d-839c-e0e56f7/sist-en-iso-21178-2020

© ISO 2019 – All rights reserved

oSIST prEN ISO 21178:2019

Bibliography **21**

iTeh STANDARD PREVIEW
(standards.iteh.ai)
SIST EN ISO 21178:2020
https://standards.iteh.ai/catalog/standards/sist/36a0d47e-3c0e-473d-839c-5cc67e0e56f7/sist-en-iso-21178-2020

 © ISO 2019 – All rights reserved

oSIST prEN ISO 21178:2019

Foreword

ISO (the International Organization for Standardization) is a worldwide federation of national standards bodies (ISO member bodies). The work of preparing International Standards is normally carried out through ISO technical committees. Each member body interested in a subject for which a technical committee has been established has the right to be represented on that committee. International organizations, governmental and non-governmental, in liaison with ISO, also take part in the work. ISO collaborates closely with the International Electrotechnical Commission (IEC) on all matters of electrotechnical standardization.

The procedures used to develop this document and those intended for its further maintenance are described in the ISO/IEC Directives, Part 1. In particular the different approval criteria needed for the different types of ISO documents should be noted. This document was drafted in accordance with the editorial rules of the ISO/IEC Directives, Part 2 (see www.iso.org/directives).

Attention is drawn to the possibility that some of the elements of this document may be the subject of patent rights. ISO shall not be held responsible for identifying any or all such patent rights. Details of any patent rights identified during the development of the document will be in the Introduction and/or on the ISO list of patent declarations received (see www.iso.org/patents).

Any trade name used in this document is information given for the convenience of users and does not constitute an endorsement.

For an explanation on the meaning of ISO specific terms and expressions related to conformity assessment, as well as information about ISO's adherence to the World Trade Organization (WTO) principles in the Technical Barriers to Trade (TBT) see the following URL: www.iso.org/iso/foreword.html.

ISO 21178 was prepared by Technical Committee ISO/TC 41, *Pulleys and belts (including veebelts)*, Subcommittee SC 3, *Conveyor belts*.

This third edition cancels and replaces the second edition (ISO 21178:2013), of which it constitutes a full revision.

The main changes compared to the previous edition are as follows:

— According to ISO/TC 41/SC 3 N 1216

iTeh STANDARD PREVIEW
(standards.iteh.ai)
SIST EN ISO 21178:2020
https://standards.iteh.ai/catalog/standards/sist/36a0d47e-3c0e-473d-839c-5cc67e0e56f7/sist-en-iso-21178-2020

© ISO 2019 – All rights reserved

oSIST prEN ISO 21178:2019

iTeh STANDARD PREVIEW
(standards.iteh.ai)

SIST EN ISO 21178:2020
https://standards.iteh.ai/catalog/standards/sist/36a0d47e-3c0e-473d-839c-5cc67e0e56f7/sist-en-iso-21178-2020

oSIST prEN ISO 21178:2019

Light conveyor belts — Determination of electrical resistances

1 Scope

This International Standard specifies test methods for determining the electrical resistances of light conveyor belts according to ISO 21183-1. The resistances are surface resistance, volume resistance perpendicular to the belt plane, and longitudinal and transverse volume resistance parallel to the belt plane. This International Standard also specifies two test methods for determining the surface resistivity and the volume resistivity.

2 Normative references

The following documents are referred to in the text in such a way that some or all of their content constitutes requirements of this document. For dated references, only the edition cited applies. For undated references, the latest edition of the referenced document (including any amendments) applies.

ISO 18573, *Conveyor belts — Test atmospheres and conditioning periods*

iTeh STANDARD PREVIEW
(standards.iteh.ai)

3 Terms and definitions

For the purposes of this document, the following terms and definitions apply.

ISO and IEC maintain terminological databases for use in standardization at the following addresses:

SIST EN ISO 21178:2020
https://standards.iteh.ai/catalog/standards/sist/ae0ae0ae-473d-839c-5cc67e0e56f7/sist-en-iso-21178-2020

— ISO Online browsing platform: available at http://www.iso.org/obp

— IEC Electropedia: available at http://www.electropedia.org/

3.1
electrical surface resistance
quotient of a direct-current voltage applied between two electrodes on the same surface of a test piece and the current between the electrodes

Note 1 to entry: It is expressed in ohms (Ω).

3.2
electrical surface resistivity
measured surface resistance calculated to apply to a square

Note 1 to entry: It is expressed in ohms (Ω) and the size of the square is immaterial.

3.3
electrical volume resistance
quotient of a direct-current voltage applied between two electrodes in contact with opposite faces of a test piece and the current between the electrodes, excluding current along the surface

Note 1 to entry: It is expressed in ohms (Ω).

3.4
electrical volume resistivity
measured volume resistance calculated to apply to a cube of unit side

Note 1 to entry: It is expressed in ohm metres (Ω•m).

© ISO 2019 – All rights reserved

oSIST prEN ISO 21178:2019

4 Symbols

Symbol	Quantity	Unit
R_{OA}	Electrical surface resistance, method A	Ω
R_{OB}	Electrical surface resistance, method B	Ω
R_{OG}	Electrical surface resistance for the determination of ρ_s	Ω
R_D	Electrical volume resistance perpendicular to the plane of the belt	Ω
R_{Di}	Electrical volume resistance in longitudinal and transverse direction parallel to the plane of the belt	Ω
ρ_s	Electrical surface resistivity	Ω
ρ_D	Electrical volume resistivity	Ω•m
$d_{1/2/3}$	Diameter of electrode	mm
d_m	Middle of the gap diameter	mm
g	Width of the gap	mm
A	Surface of the electrode	mm^2
H	Thickness of test piece	mm

NOTE The SI unit of surface resistivity, ρ_s, is the ohm (Ω). In practice, this is sometimes referred to as "ohm/square" or "Ω/sq" or "Ω/□". The size of the square is immaterial.

iTeh STANDARD PREVIEW
(standards.iteh.ai)
SIST EN ISO 21178:2020
https://standards.iteh.ai/catalog/standards/sist/36a0d47e-3c0e-473d-839c-5ccb7e0e56f7/sist-en-iso-21178-2020

5 Electrical surface resistances

5.1 Method A: measurement of surface resistance R_{OA} omni-directionally

5.1.1 Applicability

This method is applicable to belts which are electrically two-dimensionally isotropic in the plane of the belt.

5.1.2 Principle

An electric current of specified voltage is passed via electrodes through a suitably prepared test piece taken from the belt.

5.1.3 Apparatus (see Figure 1)

5.1.3.1 Sheet of insulating material, a little larger than the test piece

5.1.3.2 Two cylindrical and coaxial electrodes (see Figure 1), with contact surfaces machined flat and polished, as follows.

5.1.3.2.1 Electrode 1, circular.

5.1.3.2.2 Electrode 2, annular.

 © ISO 2019 – All rights reserved

oSIST prEN ISO 21178:2019

5.1.3.2.3 Material of electrodes, either brass or stainless steel.

5.1.3.3 Ohmmeter, having a measuring range up to 10^{10} Ω and accurate to within ±5 %.

5.1.3.4 Source of direct current, adjustable up to 500 V, and not permitting a current greater than 10 mA.

Dimensions in millimetres

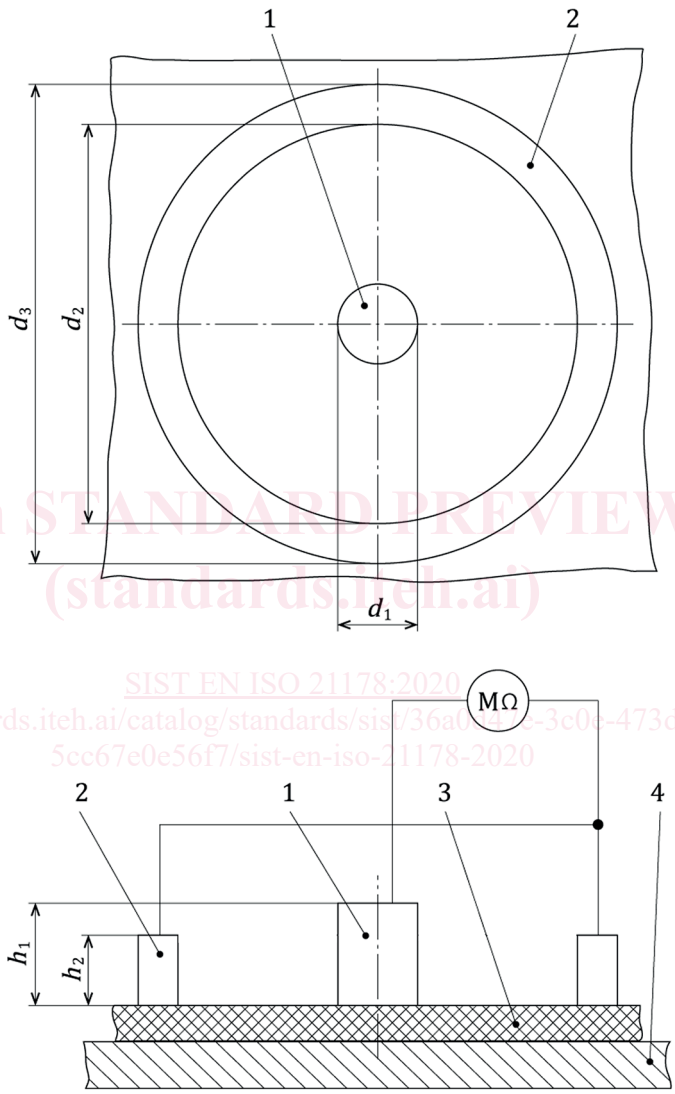

iTeh STANDARD PREVIEW
(standards.iteh.ai)
SIST EN ISO 21178:2020
https://standards.iteh.ai/catalog/standards/sist/36a0[illegible]-3c0e-473d-839c-5cc67e0e56f7/sist-en-iso-21178-2020

Key

1 electrode 1
2 electrode 2
3 test piece
4 sheet of insulating material
5 ohmmeter

Figure 1 — Test arrangement for measurement of electrical surface resistance R_{OA}

© ISO 2019 – All rights reserved