SLOVENSKI STANDARD
SIST EN 300 347-5 V3.1.1:2005

01-januar-2005

Vmesniki V pri digitalnih krajevnih telefonskih centralah (LE) – Vmesnik V5.2 za podporo dostopovnemu omrežju (AN) – 5. del: Zgradba preskušalnega niza in namen preskušanja (TSS&TP) – Specifikacija za omrežno plast na strani krajevne centrale (LE)

V interfaces at the digital Local Exchange (LE); V5.2 interface for the support of Access Network (AN); Part 5: Test Suite Structure and Test Purposes (TSS&TP) specification for the network layer (LE side)

Ta slovenski standard je istoveten z: EN 300 347-5 Version 3.1.1

ICS:

33.040.30	Komutacijski in signalizacijski sistem	Switching and signalling systems

SIST EN 300 347-5 V3.1.1:2005 en

ETSI EN 300 347-5 V3.1.1 (2001-03)

European Standard (Telecommunications series)

V interfaces at the digital Local Exchange (LE); V5.2 interface for the support of Access Network (AN); Part 5: Test Suite Structure and Test Purposes (TSS&TP) specification for the network layer (LE side)

Reference
REN/SPAN-09102-5

Keywords
AN, LE, testing, TSS&TP, V interface,
V5 interface

ETSI

650 Route des Lucioles
F-06921 Sophia Antipolis Cedex - FRANCE

Tel.: +33 4 92 94 42 00 Fax: +33 4 93 65 47 16

Siret N° 348 623 562 00017 - NAF 742 C
Association à but non lucratif enregistrée à la
Sous-Préfecture de Grasse (06) N° 7803/88

Important notice

Individual copies of the present document can be downloaded from:
http://www.etsi.org

The present document may be made available in more than one electronic version or in print. In any case of existing or perceived difference in contents between such versions, the reference version is the Portable Document Format (PDF). In case of dispute, the reference shall be the printing on ETSI printers of the PDF version kept on a specific network drive within ETSI Secretariat.

Users of the present document should be aware that the document may be subject to revision or change of status. Information on the current status of this and other ETSI documents is available at http://www.etsi.org/tb/status/

If you find errors in the present document, send your comment to:
editor@etsi.fr

Copyright Notification

Contents

Intellectual Property Rights 6

Foreword 6

1 Scope 7

2 References 7

3 Definitions and abbreviations 8
3.1 Definitions 8
3.2 Abbreviations 8

4 Test Suite Structure (TSS) 9
4.1 Overview 9
4.2 Test groups 10
4.2.1 Protocol groups 11
4.2.1.1 Control protocol 11
4.2.1.2 Public Switched Telephone Network (PSTN) protocol 11
4.2.1.3 Link control protocol 11
4.2.1.4 Bearer Channel Connection (BCC) protocol 11
4.2.1.5 Protection protocol 11
4.2.2 Main test groups 12
4.2.2.1 Basic interconnection tests (IT) 12
4.2.2.2 Capability tests (CA) 12
4.2.2.3 Valid behaviour tests (BV) 12
4.2.2.4 Inopportune behaviour tests (BO) 12
4.2.2.5 Invalid behaviour tests (BI) 12
4.2.2.6 Timer expiry and counter mismatch tests (TI) 12
4.2.2.6.1 Timers and counters of the Control protocol 12
4.2.2.6.2 Timers and counters of the PSTN protocol 13
4.2.2.6.3 Timers and counters of the Link control protocol 13
4.2.2.6.4 Timers and counters of the BCC protocol 13
4.2.2.6.5 Timers and counters of the Protection protocol 13
4.2.2.6.6 Timers and counters of the LE system management 13
4.3 Test step structure 14
4.3.1 State transitions 14
4.3.1.1 Start-up of V5.2 interface 14
4.3.1.2 Common control protocol (system management) 16
4.3.1.3 Control protocol (PSTN port FSM) 16
4.3.1.4 Control protocol (ISDN-BA port FSM) 16
4.3.1.5 Control protocol (ISDN-PRA port FSM) 16
4.3.1.6 PSTN protocol 17
4.3.1.7 Link control protocol 17
4.3.1.8 BCC protocol 17
4.3.1.9 Protection protocol 18
4.3.2 Preambles 18
4.3.3 Postambles 18
4.3.4 Status verification 19
4.3.4.1 PSTN protocol 19
4.3.4.2 Link control FSM 19
4.3.5 Common test steps 19
4.4 Defaults 19
4.5 Abstract Service Primitives (ASPs) and Protocol Data Units (PDUs) 20
4.5.1 ASPs 20
4.5.2 PDUs 20
4.5.2.1 Common control protocol 20
4.5.2.2 Port control protocol 20
4.5.2.3 PSTN protocol 20
4.5.2.4 Link control protocol 20

4.5.2.5 BCC protocol ... 20
4.5.2.6 Protection protocol ... 21
4.5.3 Information elements ... 21
4.5.3.1 Variable length information elements ... 21
4.5.3.1.1 Control protocol ... 21
4.5.3.1.2 PSTN protocol ... 21
4.5.3.1.3 Link control protocol ... 21
4.5.3.1.4 BCC protocol ... 21
4.5.3.1.5 Protection protocol ... 21
4.5.3.2 Single octet information elements ... 22
4.5.3.2.1 Control protocol ... 22
4.5.3.2.2 PSTN protocol ... 22
4.5.3.2.3 Link control protocol ... 22
4.5.3.2.4 BCC protocol ... 22
4.5.3.2.5 Protection protocol ... 22
4.6 Timers and counters of the Abstract Test Suite (ATS) ... 22

5 Test Purposes (TPs) ... 23
5.1 Introduction ... 23
5.1.1 Test purpose naming convention ... 23
5.1.2 Source of test purpose definition ... 24
5.1.3 Test strategy ... 24
5.1.3.1 Common control protocol ... 24
5.1.3.2 Port control protocol ... 24
5.1.3.3 PSTN protocol ... 24
5.1.3.4 Link control protocol ... 25
5.1.3.5 BCC protocol ... 25
5.1.3.6 Protection protocol ... 25
5.1.4 Requirements not covered by test purposes ... 26
5.1.5 Initial states ... 26
5.1.6 Test and data configuration requirements ... 27
5.2 Control protocol ... 27
5.2.1 Basic interconnection tests (V5NWKLE/CTRL/IT) ... 27
5.2.2 Capability tests (V5NWKLE/CTRL/CA) ... 27
5.2.3 Valid behaviour tests (V5NWKLE/CTRL/BV) ... 27
5.2.3.1 V5NWKLE/CTRL/BV/COM ... 27
5.2.3.1.1 V5NWKLE/CTRL/BV/COM/TRANS ... 27
5.2.3.1.2 V5NWKLE/CTRL/BV/COM/REST ... 27
5.2.3.1.3 V5NWKLE/CTRL/BV/COM/REVY ... 28
5.2.3.1.4 V5NWKLE/CTRL/BV/COM/ACCALGT ... 28
5.2.3.2 V5NWKLE/CTRL/BV/PORT ... 29
5.2.3.2.1 V5NWKLE/CTRL/BV/PORT/TRANS ... 29
5.2.3.2.2 V5NWKLE/CTRL/BV/PORT/PSTN ... 29
5.2.3.2.3 V5NWKLE/CTRL/BV/PORT/ISDNBA ... 29
5.2.3.2.4 V5NWKLE/CTRL/BV/PORT/ISDNPRA ... 30
5.2.4 Inopportune behaviour tests (V5NWKLE/CTRL/BO) ... 32
5.2.4.1 V5NWKLE/CTRL/BO/COM ... 32
5.2.4.2 V5NWKLE/CTRL/BO/PORT ... 32
5.2.4.2.1 V5NWKLE/CTRL/BO/PORT/TRANS ... 32
5.2.4.2.2 V5NWKLE/CTRL/BO/PORT/ISDNBA ... 32
5.2.4.2.3 V5NWKLE/CTRL/BO/PORT/ISDNPRA ... 32
5.2.5 Invalid behaviour tests (V5NWKLE/CTRL/BI) ... 32
5.2.6 Timer expiry and counter mismatch tests (V5NWKLE/CTRL/TI) ... 33
5.3 PSTN protocol ... 33
5.4 Link control protocol ... 33
5.4.1 Basic interconnection tests (V5NWKLE/LINK/IT) ... 33
5.4.2 Capability tests (V5NWKLE/LINK/CA) ... 33
5.4.3 Valid behaviour tests (V5NWKLE/LINK/BV) ... 33
5.4.3.1 V5NWKLE/LINK/BV/TRANS ... 33
5.4.3.2 V5NWKLE/LINK/BV/LINK ... 34
5.4.4 Inopportune behaviour tests (V5NWKLE/LINK/BO) ... 45
5.4.4.1 V5NWKLE/LINK/BO/TRANS ... 45

5.4.4.2 V5NWKLE/LINK/BO/LINK 45
5.4.5 Invalid behaviour tests (V5NWKLE/LINK/BI) 47
5.4.5.1 V5NWKLE/LINK/BI/TRANS 47
5.4.6 Timer expiry and counter mismatch tests (V5NWKLE/LINK/TI) 48
5.4.6.1 V5NWKLE/LINK/TI/TRANS 48
5.5 BCC protocol 48
5.5.1 Basic interconnection tests (V5NWKLE/BCC/IT) 49
5.5.2 Capability tests (V5NWKLE/BCC/CA) 49
5.5.3 Valid behaviour tests (V5NWKLE/BCC/BV) 50
5.5.4 Inopportune behaviour tests (V5NWKLE/BCC/BO) 53
5.5.5 Invalid behaviour tests (V5NWKLE/BCC/BI) 56
5.5.6 Timer expiry and counter mismatch tests (V5NWKLE/BCC/TI) 58
5.6 Protection protocol 58
5.6.1 Basic interconnection tests (V5NWKLE/PROTECT/IT) 59
5.6.2 Capability tests (V5NWKLE/PROTECT/CA) 59
5.6.3 Valid behaviour tests (V5NWKLE/PROTECT/BV) 59
5.6.4 Invalid behaviour tests (V5NWKLE/PROTECT/BI) 63
5.6.5 Timer expiry and counter mismatch tests (V5NWKLE/PROTECT/TI) 64

Bibliography 66

History 67

Intellectual Property Rights

IPRs essential or potentially essential to the present document may have been declared to ETSI. The information pertaining to these essential IPRs, if any, is publicly available for **ETSI members and non-members**, and can be found in ETSI SR 000 314: *"Intellectual Property Rights (IPRs); Essential, or potentially Essential, IPRs notified to ETSI in respect of ETSI standards"*, which is available from the ETSI Secretariat. Latest updates are available on the ETSI Web server (http://www.etsi.org/ipr).

Pursuant to the ETSI IPR Policy, no investigation, including IPR searches, has been carried out by ETSI. No guarantee can be given as to the existence of other IPRs not referenced in ETSI SR 000 314 (or the updates on the ETSI Web server) which are, or may be, or may become, essential to the present document.

Foreword

This European Standard (Telecommunications series) has been produced by ETSI Technical Committee Services and Protocols for Advanced Networks (SPAN).

The present document is part 5 of a multi-part deliverable covering the V interfaces at the digital Local Exchange (LE); V5.2 interface for the support of Access Network (AN), as described below:

Part 1: "V5.2 interface specification";

Part 2: "Protocol Implementation Conformance Statement (PICS) proforma specification";

Part 3: "Test Suite Structure and Test Purposes (TSS&TP) specification for the network layer (AN side)";

Part 4: "Abstract Test Suite (ATS) and partial Protocol Implementation eXtra Information for Testing (PIXIT) proforma specification for the network layer (AN side)";

Part 5: "Test Suite Structure and Test Purposes (TSS&TP) specification for the network layer (LE side)";

Part 6: "Abstract Test Suite (ATS) and partial Protocol Implementation eXtra Information for Testing (PIXIT) proforma specification for the network layer (LE side)";

Part 7: "Test Suite Structure and Test Purposes (TSS&TP) specification for the data link layer";

Part 8: "Abstract Test Suite (ATS) and partial Protocol Implementation eXtra Information for Testing (PIXIT) proforma specification for the data link layer";

Part 9: "Test specification for the physical layer".

National transposition dates	
Date of adoption of this EN:	23 March 2001
Date of latest announcement of this EN (doa):	30 June 2001
Date of latest publication of new National Standard or endorsement of this EN (dop/e):	31 December 2001
Date of withdrawal of any conflicting National Standard (dow):	31 December 2001

1 Scope

The present document contains the Test Suite Structure and Test Purposes (TSS&TP) for the NetWorK layer (NWK) and parts of the system management of the Local Exchange (LE) side of a V5.2 interface.

The objective of the present document is to provide conformance tests giving a high probability of inter-operability of an Access Network (AN) and a LE from different manufacturers over the V5.2 interface. The present document covers only the procedures described in EN 300 347-1 [2].

ISO/IEC 9646-1 [4] and ISO/IEC 9646-2 [5] are used as the basis for the test methodology.

The present document needs to be read in conjunction with EN 300 324-5 [1]. The two documents share a common format and clauses within EN 300 324-5 [1] are directly referenced.

2 References

The following documents contain provisions which, through reference in this text, constitute provisions of the present document.

- References are either specific (identified by date of publication, edition number, version number, etc.) or non-specific.
- For a specific reference, subsequent revisions do not apply.
- For a non-specific reference, the latest version applies.
- A non-specific reference to an ETS shall also be taken to refer to later versions published as an EN with the same number.

[1] ETSI EN 300 324-5 (V3.1.1): "V interfaces at the digital Local Exchange (LE); V5.1 interface for the support of Access Network (AN); Part 5: Test Suite Structure and Test Purposes (TSS&TP) specification for the network layer (LE side)".

[2] ETSI EN 300 347-1 (V2.2.2): "V interfaces at the digital Local Exchange (LE); V5.2 interface for the support of Access Network (AN); Part 1: V5.2 interface specification".

[3] ETSI EN 300 347-2 (V2.1.3): "V interfaces at the digital Local Exchange (LE); V5.2 interface for the support of Access Network (AN); Part 2: Protocol Implementation Conformance Statement (PICS) proforma specification".

[4] ISO/IEC 9646-1 (1995): "Information technology - Open systems interconnection - Conformance testing methodology and framework - Part 1: General concepts".

[5] ISO/IEC 9646-2 (1995): "Information technology - Open systems interconnection - Conformance testing methodology and framework - Part 2: Abstract test suite specification".

[6] ETSI ETS 300 347-7 (1999): "V interfaces at the digital Local Exchange (LE); V5.2 interface for the support of Access Network (AN); Part 7: Test Suite Structure and Test Purposes (TSS&TP) specification for the data link layer".

3 Definitions and abbreviations

3.1 Definitions

For the purposes of the present document, the terms and definitions given in EN 300 324-5 [1], EN 300 347-1 [2] and the following apply.

specified information element: information element identifier as defined in EN 300 347-1 [2]

unspecified information element: information element identifier which is not defined in EN 300 347-1 [2]

incorrect information element: specified information element carrying information element types which are not defined in EN 300 347-1 [2]

3.2 Abbreviations

For the purposes of the present document, the following abbreviations apply:

AIS	Alarm Indication Signal
AN	Access Network
ASP	Abstract Service Primitive
ATS	Abstract Test Suite
BCC	Bearer Channel Connection
BI	Invalid Behaviour
BO	Inopportune Behaviour
BV	Valid Behaviour
CA	Capability
COM	Common control protocol
CTRL	Control
FE	Function Element
FSM	Finite State Machine
ID	Identifier
IE	Information Element
ISDN	Integrated Services Digital Network
ISDN-BA	ISDN Basic Access
ISDN-PRA	ISDN Primary Rate Access
IT	Basic Interconnection
IUT	Implementation Under Test
L3addr	Layer 3 address
LE	Local Exchange
LT1	Lower Tester 1
MDU	Management Data Unit
MPH	Management Physical layer
NWK	Network layer
PDU	Protocol Data Unit
PICS	Protocol Implementation Conformance Statement
PSTN	Public Switched Telephone Network
RAI	Remote Alarm Indication
REQ	Request
SN	Sequence Number
SUT	System Under Test
TE	Terminal Equipment (ISDN or PSTN)
TI	Timer
TP	Test Purpose
TS	Time Slot
TSS	Test Suite Structure
UP	User Port

4 Test Suite Structure (TSS)

4.1 Overview

Figure 1 shows the structure of the V5.2 NWK test suite.

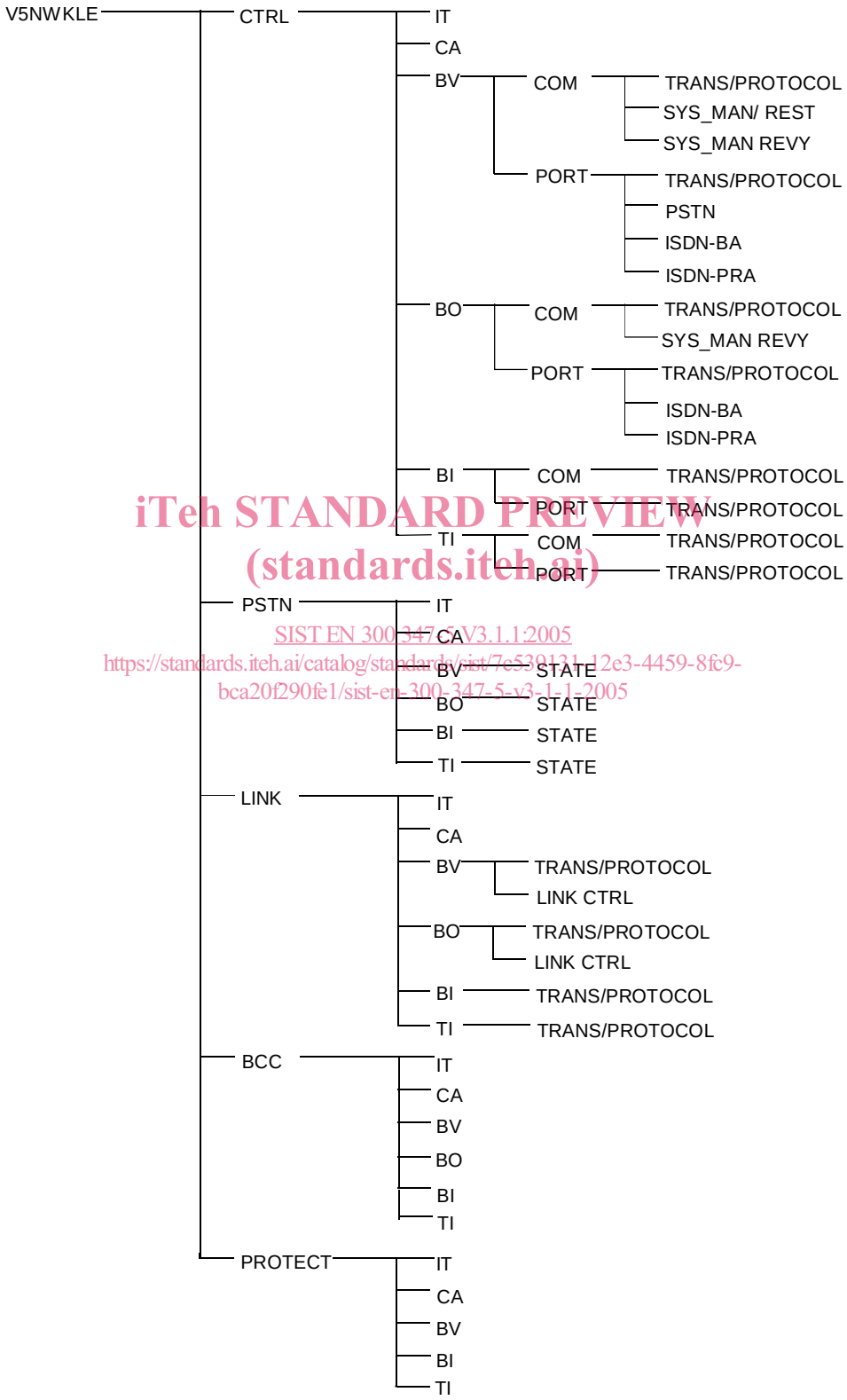

Figure 1: NWK LE test suite structure

4.2 Test groups

Figure 2 gives an overview of the various protocol entities of a V5.2 interface. Table 1 maps each protocol entity on tested protocol groups.

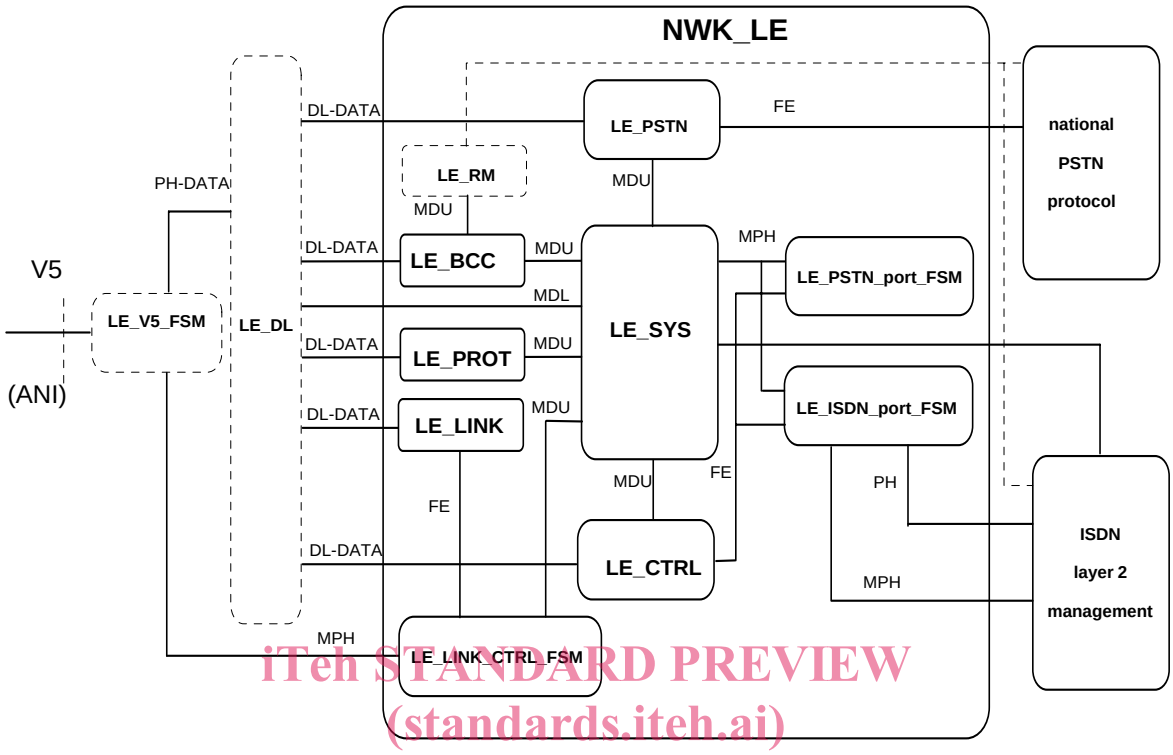

Figure 2: NWK LE - protocol entity overview

Table 1: Names used in figure 2 that correspond to EN 300 347-1 [2]

Network layer protocol entities	Protocol entities defined in EN 300 347-1 [2]	Protocol group references
LE_PSTN_port_FSM	LE_PSTN_user_port_FSM	4.2.1.1
LE_ISDN_port_FSM	LE_ISDN-BA_user_port_FSM LE_ISDN-PRA_user_port_FSM	4.2.1.1
LE_CTRL	LE_control_protocol	4.2.1.1
LE_SYS	LE_system_management	4.2.1.1
LE_PSTN	LE_PSTN_protocol	4.2.1.2
LE_LINK	LE_link_control_protocol	4.2.1.3
LE_LINK_CTRL_FSM	LE_link_control_FSM	4.2.1.3
LE_RM	LE_resource_management	4.2.1.4
LE_BCC	LE_BCC_protocol	4.2.1.4
LE_PROT	LE_protection_protocol	4.2.1.5

4.2.1 Protocol groups

4.2.1.1 Control protocol

The contents of this clause are identical to clause 4.2.1.1 of EN 300 324-5 [1] with the following additions for the ISDN-PRA user port Finite State Machine (FSM).

Depending on provisioning the following configuration is tested:

LE_ISDN-PRA_user_port:
The blocking, blocking request and co-ordinated unblocking procedures of the LE_ISDN-PRA_user_port_FSM are verified in the test groups V5NWKLE/CTRL/BV/PORT/ISDNPRA and V5NWKLE/CTRL/BO/PORT/ISDNPRA.

4.2.1.2 Public Switched Telephone Network (PSTN) protocol

The contents of this clause are identical to clause 4.2.1.2 of EN 300 324-5 [1].

4.2.1.3 Link control protocol

All tests in the Link control protocol (V5NWKLE/LINK) test group are intended to verify as thoroughly as possible the various procedures of the LE_link_control_protocol entity. Depending on provisioning the following configurations are covered:

LE_link_control_protocol:
The normal and exceptional procedures of the LE_link_control_protocol are verified in the test groups V5NWKLE/LINK/BV/TRANS, V5NWKLE/LINK/BO/TRANS and V5NWKLE/LINK/TI/TRANS.
The error handling procedures are verified in the test group V5NWKLE/LINK/BI/TRANS.

LE_link_control_FSM:
The link failure, link blocking, link blocking request, co-ordinated link unblocking and link identification procedures of the LE_link_control_FSM are verified in the test group V5NWKLE/LINK/BV/LINK and V5NWKLE/LINK/BO/LINK.

4.2.1.4 Bearer Channel Connection (BCC) protocol

All tests in the BCC protocol (V5NWKLE/BCC) test group are intended to verify as thoroughly as possible the various procedures of the LE_BCC protocol entity.

The following BCC procedures are covered:

- normal and exceptional bearer channel allocation procedure;
- normal and exceptional bearer channel de-allocation procedure;
- audit procedure;
- AN internal failure notification procedure;
- error handling procedures.

4.2.1.5 Protection protocol

All tests in the Protection protocol (V5NWKLE/PROTECT) test group are intended to verify as thoroughly as possible the various procedures of the LE Protection protocol entity.

The following Protection protocol procedures are covered:

- transmission of Protection protocol messages;
- normal and exceptional sequence number reset procedure;

- normal and exceptional standard protection switch-over procedure initiated by LE side;
- normal and exceptional dedicated protection switch-over procedure initiated by OS LE;
- normal and exceptional switch-over procedure requested by AN side;
- error handling procedures.

4.2.2 Main test groups

4.2.2.1 Basic interconnection tests (IT)

The contents of this clause are identical to clause 4.2.2.1 of EN 300 324-5 [1].

4.2.2.2 Capability tests (CA)

The contents of this clause are identical to clause 4.2.2.2 of EN 300 324-5 [1].

4.2.2.3 Valid behaviour tests (BV)

The contents of this clause are identical to clause 4.2.2.3 of EN 300 324-5 [1].

4.2.2.4 Inopportune behaviour tests (BO)

The contents of this clause are identical to clause 4.2.2.4 of EN 300 324-5 [1].

4.2.2.5 Invalid behaviour tests (BI)

The contents of this clause are identical to clause 4.2.2.5 of EN 300 324-5 [1].

4.2.2.6 Timer expiry and counter mismatch tests (TI)

Different timers and counters are defined to supervise the various state transitions. This test group is intended to verify that the FSM is reacting properly to an expire of one of the timers or counter mismatch.

4.2.2.6.1 Timers and counters of the Control protocol

The contents of this clause are identical to clause 4.2.2.6.1 of EN 300 324-5 [1] with additions for the accelerated alignment procedure. This timers are given in EN 300 347-1 [2], annex C, table C.1.

TU1A MDU-CTRL(UNBLOCK ALL RELEVANT PSTN AND ISDN PORTS REQUEST) sent;

TU2A MDU-CTRL(UNBLOCK ALL RELEVANT PSTN AND ISDN PORTS COMPLETE) sent;

TU1B MDU-CTRL(UNBLOCK ALL RELEVANT PSTN PORTS REQUEST) sent;

TU2B MDU-CTRL(UNBLOCK ALL RELEVANT PSTN PORTS COMPLETE) sent;

TU1C MDU-CTRL(UNBLOCK ALL RELEVANT ISDN PORTS REQUEST) sent;

TU2C MDU-CTRL(UNBLOCK ALL RELEVANT ISDN PORTS COMPLETE) sent;

TU1D MDU-CTRL(BLOCK ALL PSTN PORTS REQUEST) sent;

TU2D MDU-CTRL(BLOCK ALL PSTN PORTS COMPLETE) sent;

TU1E MDU-CTRL(BLOCK ALL ISDN PORTS REQUEST) sent;

TU2E MDU-CTRL(BLOCK ALL ISDN PORTS COMPLETE) sent.

4.2.2.6.2 Timers and counters of the PSTN protocol

The contents of this clause are identical to clause 4.2.2.6.2 of EN 300 324-5 [1].

4.2.2.6.3 Timers and counters of the Link control protocol

Refer to EN 300 347-1 [2], table 23.

- LCTO1 LINK CONTROL message sent.

4.2.2.6.4 Timers and counters of the BCC protocol

Refer to EN 300 347-1 [2], table 46.

- TBCC1 ALLOCATION sent;
- TBCC2 DE-ALLOCATION sent;
- TBCC3 DE-ALLOCATION sent;
- TBCC4 AUDIT sent.

4.2.2.6.5 Timers and counters of the Protection protocol

Refer to EN 300 347-1 [2], table 64.

- TSO1 SWITCH-OVER COM sent;
- TSO2 OS-SWITCH-OVER COM sent;
- TSO4 RESET SN COM sent;
- TSO5 RESET SN COM received.

Refer to EN 300 347-1 [2], clause 18.6.2.

- VP(S) Send State Variable;
- VP(R) Receive State Variable.

4.2.2.6.6 Timers and counters of the LE system management

- TC4 MDL-RELEASE-INDICATION from LINK-CONTROL-DL;
- TC5 Expiry TC4;
- TC6 MDL-RELEASE-INDICATION from BCC-DL;
- TC7 Expiry TC6;
- TC10 MDL-ESTABLISH-CONFIRM or MDL-ESTABLISH-INDICATE received from the first of all V5.2 Data links in start-up.

Otherwise the contents of this clause are identical to clause 4.2.6.3 of EN 300 324-5 [1].