SLOVENSKI STANDARD
oSIST prEN IEC 62714-4:2019

01-julij-2019

Oblika izmenjave tehničnih podatkov za uporabo v industrijskem inženiringu avtomatizacije sistemov - Označevalni jezik za avtomatizacijo (AvtomatizacijaML) - 4. del: Logika

Engineering data exchange format for use in industrial automation systems engineering - Automation Markup Language - Part 4: Logic

Ta slovenski standard je istoveten z: prEN IEC 62714-4:2019

ICS:

25.040.40	Merjenje in krmiljenje industrijskih postopkov	Industrial process measurement and control
35.060	Jeziki, ki se uporabljajo v informacijski tehniki in tehnologiji	Languages used in information technology
35.240.50	Uporabniške rešitve IT v industriji	IT applications in industry

oSIST prEN IEC 62714-4:2019 en,fr,de

65E/654/CDV

COMMITTEE DRAFT FOR VOTE (CDV)

PROJECT NUMBER: **IEC 62714-4 ED1**	
DATE OF CIRCULATION: **2019-05-17**	CLOSING DATE FOR VOTING: **2019-08-09**
SUPERSEDES DOCUMENTS: **65E/619/CD,65E/651/CC**	

IEC SC 65E : DEVICES AND INTEGRATION IN ENTERPRISE SYSTEMS	
SECRETARIAT: United States of America	SECRETARY: Mr Donald (Bob) Lattimer
OF INTEREST TO THE FOLLOWING COMMITTEES:	PROPOSED HORIZONTAL STANDARD: ☐ Other TC/SCs are requested to indicate their interest, if any, in this CDV to the secretary.
FUNCTIONS CONCERNED: ☐ EMC ☐ ENVIRONMENT	☐ QUALITY ASSURANCE ☐ SAFETY
☒ SUBMITTED FOR CENELEC PARALLEL VOTING **Attention IEC-CENELEC parallel voting** The attention of IEC National Committees, members of CENELEC, is drawn to the fact that this Committee Draft for Vote (CDV) is submitted for parallel voting. The CENELEC members are invited to vote through the CENELEC online voting system.	☐ NOT SUBMITTED FOR CENELEC PARALLEL VOTING

This document is still under study and subject to change. It should not be used for reference purposes.

Recipients of this document are invited to submit, with their comments, notification of any relevant patent rights of which they are aware and to provide supporting documentation.

TITLE:

Engineering data exchange format for use in industrial automation systems engineering - Automation Markup Language - Part 4: Logic

PROPOSED STABILITY DATE: 2024

NOTE FROM TC/SC OFFICERS:

CONTENTS

INTERNATIONAL ELECTROTECHNICAL COMMISSION

ENGINEERING DATA EXCHANGE FORMAT FOR USE IN INDUSTRIAL AUTOMATION SYSTEMS ENGINEERING – Automation Markup Language –

Part 4: Logic

FOREWORD

1) The International Electrotechnical Commission (IEC) is a worldwide organization for standardization comprising all national electrotechnical committees (IEC National Committees). The object of IEC is to promote international co-operation on all questions concerning standardization in the electrical and electronic fields. To this end and in addition to other activities, IEC publishes International Standards, Technical Specifications, Technical Reports, Publicly Available Specifications (PAS) and Guides (hereafter referred to as "IEC Publication(s)"). Their preparation is entrusted to technical committees; any IEC National Committee interested in the subject dealt with may participate in this preparatory work. International, governmental and non-governmental organizations liaising with the IEC also participate in this preparation. IEC collaborates closely with the International Organization for Standardization (ISO) in accordance with conditions determined by agreement between the two organizations.

2) The formal decisions or agreements of IEC on technical matters express, as nearly as possible, an international consensus of opinion on the relevant subjects since each technical committee has representation from all interested IEC National Committees.

3) IEC Publications have the form of recommendations for international use and are accepted by IEC National Committees in that sense. While all reasonable efforts are made to ensure that the technical content of IEC Publications is accurate, IEC cannot be held responsible for the way in which they are used or for any misinterpretation by any end user.

4) In order to promote international uniformity, IEC National Committees undertake to apply IEC Publications transparently to the maximum extent possible in their national and regional publications. Any divergence between any IEC Publication and the corresponding national or regional publication shall be clearly indicated in the latter.

5) IEC itself does not provide any attestation of conformity. Independent certification bodies provide conformity assessment services and, in some areas, access to IEC marks of conformity. IEC is not responsible for any services carried out by independent certification bodies.

6) All users should ensure that they have the latest edition of this publication.

7) No liability shall attach to IEC or its directors, employees, servants or agents including individual experts and members of its technical committees and IEC National Committees for any personal injury, property damage or other damage of any nature whatsoever, whether direct or indirect, or for costs (including legal fees) and expenses arising out of the publication, use of, or reliance upon, this IEC Publication or any other IEC Publications.

8) Attention is drawn to the Normative references cited in this publication. Use of the referenced publications is indispensable for the correct application of this publication.

9) Attention is drawn to the possibility that some of the elements of this IEC Publication may be the subject of patent rights. IEC shall not be held responsible for identifying any or all such patent rights.

International Standard IEC 62714-4 has been prepared by subcommittee 65E: Devices and integration in enterprise systems, of IEC technical committee 65: Industrial-process measurement, control and automation.

The text of this standard is based on the following documents:

FDIS	Report on voting
65E/XXX/FDIS	65E/XX/RVD

Full information on the voting for the approval of this standard can be found in the report on voting indicated in the above table.

This publication has been drafted in accordance with the ISO/IEC Directives, Part 2.

A list of all parts in the IEC 62714 series, published under the general title *Engineering data exchange format for use in industrial systems engineering – Automation Markup Language*, can be found on the IEC website.

The committee has decided that the contents of this publication will remain unchanged until the stability date indicated on the IEC web site under "http://webstore.iec.ch" in the data related to the specific publication. At this date, the publication will be

- reconfirmed,
- withdrawn,
- replaced by a revised edition, or
- amended.

The National Committees are requested to note that for this publication the stability date is 2023.

THIS TEXT IS INCLUDED FOR THE INFORMATION OF THE NATIONAL COMMITTEES AND WILL BE DELETED AT THE PUBLICATION STAGE.

INTRODUCTION

The data exchange format defined in IEC 62714 (Automation Markup Language (AML)) is an XML schema based data format and has been developed in order to support the data exchange between engineering tools in a heterogeneous engineering tool landscape. IEC 62714-1 gives an overview about the format.

The goal of AML is to interconnect engineering tools from the existing heterogeneous tool landscape in their different disciplines, e.g. mechanical plant engineering, electrical design, process engineering, process control engineering, HMI development, PLC programming, robot programming, etc.

AML stores engineering information following the object oriented paradigm and allows modelling of physical and logical plant components as data objects encapsulating different aspects. An object may consist of other sub-objects and may itself be part of a larger composition or aggregation. Typical objects in plant automation comprise information on topology, geometry, kinematics, and logic, whereas logic comprises sequencing, behaviour, and control.

AML combines existing industry data formats that are designed for the storage and exchange of different aspects of engineering information. These data formats are used on “as-is” basis within their own specifications and are not branched for AML needs.

The core of AML is the top-level data format CAEX that connects the different data formats. Therefore, AML has an inherent distributed document architecture.

Figure 1 illustrates the basic AML architecture and the distribution of topology, geometry, kinematic, and logic information.

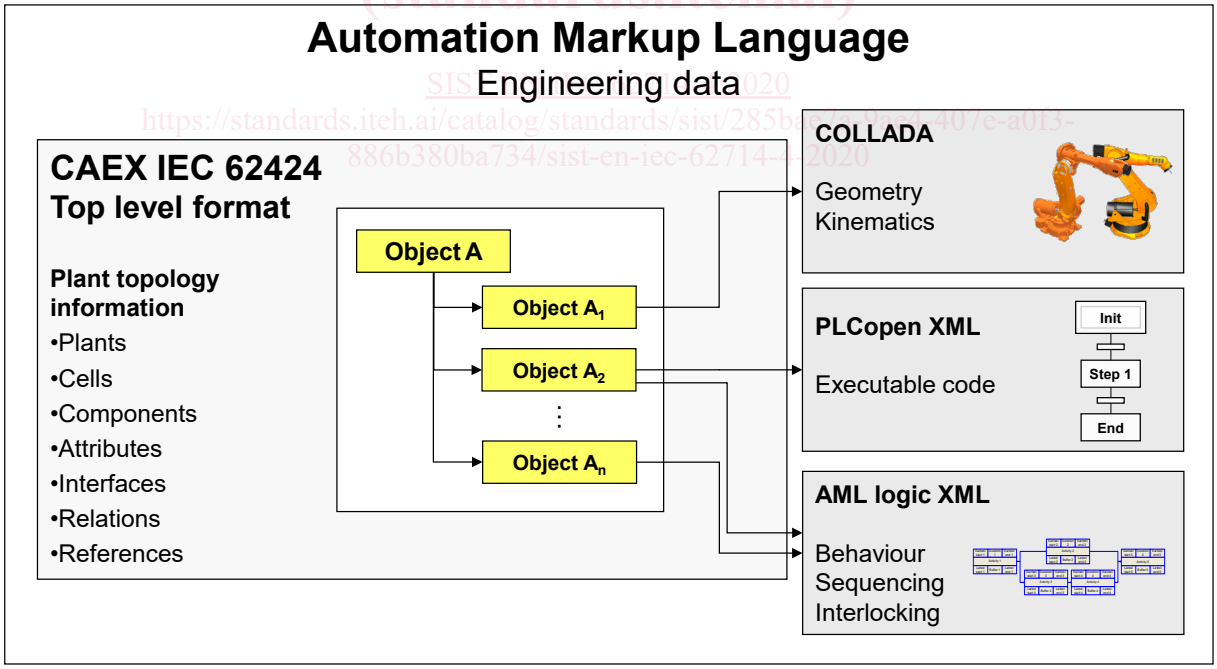

Figure 1 – Overview of the engineering data exchange format AML

Due to the different aspects of AML, IEC 62714 consists of different parts focussing on different aspects.

- IEC 62714-1: Architecture and general requirements

  This part specifies the general AML architecture, the modelling of engineering data, classes, instances, relations, references, hierarchies, basic AML libraries and extended AML concepts.

- IEC 62714-2: Role class libraries

  This part specifies additional AML libraries.

- IEC 62714-3: Geometry and kinematics

  This part specifies the modelling of geometry and kinematics information.

- IEC 62714-4: Logic

  This part specifies the modelling and referencing of logic information.

Further parts may be added in the future in order to interconnect further data standards to AML.

Clause 5 gives an informative overview of this part of the standard.

Clause 6 gives a normative description of the considered logic models.

Clause 7 gives a normative description of the AML logic XML schema, with which logic models can be strored.

Clause 8 specifies the normative provisions to store the logic models in AML logic XML.

Clause 9 defines how to store meta information about the source tool directly into the AML logic XML document.

Clause 10 defines a logic related role class library and interface class library.

Clause 10.4.2 gives a normative description regarding referencing logic information in AML logic XML documents.

Clause 12 gives a normative description regarding referencing interlocking information in AML logic XML documents.

Annex A provides examples for the storage of logic models in AML logic XML.

Annex B describes the referencing methods for logic information.

Annex C describes the referencing methods for interlocking information.

Annex D gives an informative XML representation of the libraries defined in this part of IEC 62714.

Annex E gives a normative XML representation of the AML logic XML schema defined in this part of IEC 62714.

ENGINEERING DATA EXCHANGE FORMAT FOR USE IN INDUSTRIAL AUTOMATION SYSTEMS ENGINEERING – Automation Markup Language –

Part 4: Logic

1 Scope

This part of IEC 62714 specifies the integration of logic information as part of an AML model for the data exchange in a heterogenous engineering tool landscape of production systems.

This part of IEC 62714 specifies three types of logic information: sequencing, behaviour, and interlocking information.

This part of IEC 62714 deals with the six following sequencing and behaviour logic models (covering the different phases of the engineering process of production systems) and how they are integrated in AML: Gantt chart, activity-on-node network, timing diagram, Sequential Function Chart (SFC), Function Block Diagram (FBD), and mathematical expression.

This part of IEC 62714 specifies how to model Gantt chart, activity-on-node network, and timing diagram and how they are stored in Intermediate Modelling Layer (IML).

NOTE 1 With this, it is possible to transform one logic model into another one. A forward transformation supports the information enrichment process and reduces or avoids a re-entry of information between the exchanging engineering tools.

NOTE 2 Mapping of other logic models, e.g. event-driven logic models like state charts, onto IML is possible.

This part of IEC 62714 specifies how interlocking information is modelled (as interlocking source and target groups) in AML. The interlocking logic model is stored in Function Block Diagram (FBD).

This part of IEC 62714 specifies the AML logic XML schema that stores the logic models by using IEC 61131-10.

This part of IEC 62714 specifies how to reference PLC programs stored in PLCopen XML documents.

This part of IEC 62714 does not define details of the data exchange procedure or implementation requirements for the import/export tools.

2 Normative references

The following referenced documents are indispensable for the application of this document. For dated references, only the edition cited applies. For undated references, the latest edition of the referenced document (including any amendments) applies.

IEC 62714-1:2014, *Engineering data exchange format for use in industrial automation systems engineering – Automation markup language – Part 1: Architecture and general requirements*

IEC 62424:2008, *Representation of process control engineering - Requests in P&I diagrams and data exchange between P&ID tools and PCE-CAE tools*

Extensible Markup Language (XML) 1.0 (Third Edition), W3C Recommendation 04 February 2004 (available at <http://www.w3.org/TR/2004/REC-xml-20040204/>) [viewed on 2016-07-28]

IEC 61131-3, *Programmable controllers - Part 3: Programming languages*