INTERNATIONAL STANDARD

# ISO 6182-6

Second edition
2020-03

# Fire protection — Automatic sprinkler systems —

## Part 6: Requirements and test methods for check valves

*Protection contre l'incendie — Systèmes d'extinction automatiques du type sprinkler —*
*Partie 6: Exigences et méthodes d'essai des postes de contrôle*



Reference number
ISO 6182-6:2020(E)

ISO copyright office
CP 401 • Ch. de Blandonnet 8
CH-1214 Vernier, Geneva
Phone: +41 22 749 01 11
Fax: +41 22 749 09 47
Email: copyright@iso.org
Website: www.iso.org

Published in Switzerland

# Contents

Page

# Foreword

ISO (the International Organization for Standardization) is a worldwide federation of national standards bodies (ISO member bodies). The work of preparing International Standards is normally carried out through ISO technical committees. Each member body interested in a subject for which a technical committee has been established has the right to be represented on that committee. International organizations, governmental and non-governmental, in liaison with ISO, also take part in the work. ISO collaborates closely with the International Electrotechnical Commission (IEC) on all matters of electrotechnical standardization.

The procedures used to develop this document and those intended for its further maintenance are described in the ISO/IEC Directives, Part 1. In particular, the different approval criteria needed for the different types of ISO documents should be noted. This document was drafted in accordance with the editorial rules of the ISO/IEC Directives, Part 2 (see www.iso.org/directives).

Attention is drawn to the possibility that some of the elements of this document may be the subject of patent rights. ISO shall not be held responsible for identifying any or all such patent rights. Details of any patent rights identified during the development of the document will be in the Introduction and/or on the ISO list of patent declarations received (see www.iso.org/patents).

Any trade name used in this document is information given for the convenience of users and does not constitute an endorsement.

For an explanation of the voluntary nature of standards, the meaning of ISO specific terms and expressions related to conformity assessment, as well as information about ISO's adherence to the World Trade Organization (WTO) principles in the Technical Barriers to Trade (TBT), see www.iso.org/iso/foreword.html.



This document was prepared by Technical Committee ISO/TC 21, *Equipment for fire protection and fire fighting*, Subcommittee SC 5, *Fixed firefighting systems using water*.



This second edition cancels and replaces the first edition (ISO 6182-6:2006), which has been technically revised.

A list of all the parts in the ISO 6182 series can be found on the ISO website.

Any feedback or questions on this document should be directed to the user's national standards body. A complete listing of these bodies can be found at www.iso.org/members.html.

 

# Introduction

This document is part of the ISO 6182 series of standards covering requirements and test methods for check valves in the main water way to a sprinkler installation. Check valves are used to prevent the backflow of water and may be installed in several locations within a sprinkler system, e.g. if the sprinkler system is fed from multiple pumps or if sprinkler installations are provided with multiple flow switches for better fire localization.



 

# Fire protection — Automatic sprinkler systems —

# Part 6: Requirements and test methods for check valves

## 1 Scope

This document specifies performance, requirements, test methods and marking requirements, for check valves used to supply water in automatic fire protection systems.

It is not applicable to trim valves.

## 2 Normative references

The following documents are referred to in the text in such a way that some or all of their content constitutes requirements of this document. For dated references, only the edition cited applies. For undated references, the latest edition of the referenced document (including any amendments) applies.

ISO 898-1, *Mechanical properties of fasteners made of carbon steel and alloy steel — Part 1: Bolts, screws and studs*



ISO 898-2, *Mechanical properties of fasteners — Part 2: Nuts with specified proof load values — Coarse thread*



## 3 Terms and definitions

For the purposes of this document, the following terms and definitions apply.

ISO and IEC maintain terminological databases for use in standardization at the following addresses:

— ISO Online browsing platform: available at https://www.iso.org/obp

— IEC Electropedia: available at http://www.electropedia.org/

**3.1**
**check valve**
valve that allows fluid flow in one direction only

**3.2**
**clapper**
type of sealing element

Note 1 to entry: See also *sealing assembly* (3.7).

**3.3**
**corrosion-resistant material**
bronze, brass, Monel®[1)] metal, austenitic stainless steel, or equivalent metallic or plastic material conforming with the requirements of this document

1) Monel® is a trademark of Special Metals Corporation and is an example of a suitable product available commercially. This information is given for the convenience of users of this document and does not constitute an endorsement by ISO of this product. Equivalent products may be used if they can be shown to lead to the same results.

 

**3.4**
**flow velocity**
speed of water flow through a valve expressed as the equivalent water velocity through a pipe of the same nominal size as the valve

**3.5**
**rated working pressure**
maximum service pressure at which a check valve is intended to operate

**3.6**
**reinforced elastomeric element**
element of clapper, clapper assembly or seat seals in a composite of an elastomeric compound with one or more other components

**3.7**
**sealing assembly**
main movable sealing element (such as a clapper) of the valve which prevents the reverse flow of air or water which maintains pressure in the system piping

Note 1 to entry: See also *clapper* (3.2).

**3.8**
**sealing assembly seat ring**
main fixed sealing element of a valve which prevents the reverse flow of water and which maintains pressure in the system piping



## 4 Requirements



### 4.1 Nominal sizes

The nominal size of a valve shall be the nominal diameter of the inlet and outlet connections, i.e. the pipe size for which the connections are intended. Sizes shall be not less than DN 25. The diameter of the waterway through the sealing assembly seat ring shall be permitted to be less than the nominal size.

### 4.2 Connections

**4.2.1** All connections shall be designed for use at the rated working pressure of the valve.

**4.2.2** The dimensions of all connections shall conform with the applicable requirements of International Standards. If International Standards are not applicable, national standards may be used.

### 4.3 Rated working pressure

**4.3.1** The rated working pressure shall be not less than 1,2 MPa (12 bar).

**4.3.2** The rated working pressure shall be specified by the manufacturer.

**4.3.3** Inlet and outlet connections shall be permitted to be machined for lower working pressures to match installation equipment provided the valve is marked with the lower working pressure.

### 4.4 Bodies and covers

**4.4.1** Bodies and covers shall be made of a material having corrosion resistance at least equivalent to cast iron.

 

**4.4.2** Cover fasteners shall be made of steel, stainless steel, titanium, or other materials with equivalent physical and mechanical properties.

**4.4.3** Non-metallic materials other than gaskets, diaphragms and seals or metals with a melting point less than 800 °C shall not form part of the valve body or cover.

**4.4.4** For valves with a cover plate, it shall not be possible to assemble the valve with the cover plate in a position which either improperly indicates flow direction or prevents proper operation of the valve.

## 4.5 Strength (see 6.3)

**4.5.1** An assembled valve, with the sealing assembly blocked open, shall withstand, without rupture, an internal hydrostatic pressure of four times the rated working pressure for a period of 5 min, when tested as specified in 6.3.

**4.5.2** If the test in accordance with 6.3 is not done with standard production fasteners, the supplier shall provide documentation showing that the calculated design load of any standard production fastener, neglecting the force required to compress the gasket, does not exceed the minimum tensile strength specified in ISO 898-1 and ISO 898-2 when the valve is pressurized to four times the rated working pressure. The area of the application of pressure shall be calculated as follows.

a) If a full-face gasket is used, the area of application of pressure is that extending out to a line defined by the inner edge of the bolts.

b) If an “O”-ring seal or ring gasket is used, the area of application of force is that extending out to the centre line of the “O”-ring or gasket.



## 4.6 Access for maintenance

Means shall be provided to permit access to working parts and removal of the sealing assembly.

## 4.7 Components

**4.7.1** Any component which is normally disassembled during servicing shall be designed so that it cannot be reassembled improperly without providing an external visual indication, when the valve is returned to service.

**4.7.2** With the exception of valve seats, all parts intended for field replacement shall be capable of being disassembled and reassembled using tools normally employed by the trade.

**4.7.3** All components shall be non-detachable during normal operation of the valve.

**4.7.4** Failure of the sealing assembly diaphragms or seals shall not prevent the valve from opening.

**4.7.5** Seat surfaces of sealing assemblies, including the sealing assembly seat ring, shall have corrosion resistance equivalent to brass or bronze and have sufficient width of surface contact to withstand ordinary wear and tear, rough usage, compression stresses and damage due to pipe scale or foreign matter carried by the water.

**4.7.6** Springs and diaphragms shall not fracture or rupture, when tested in accordance with 6.2.

**4.7.7** There shall be no sign, on visual examination, of damage to the sealing assembly after testing for the operational requirements in accordance with 6.9.

**4.7.8** When wide open, the sealing assembly shall bear against a definite stop. The opening of the valve or reaction of the water shall not permanently twist, bend or fracture valve parts.

**4.7.9** Where rotation or sliding motion is required, the part or its bearing shall be made of a corrosion resistant material. Materials lacking corrosion resistance shall be fitted with bushings, inserts or other parts made of corrosion resistant materials at those points where freedom of movement is required.

**4.7.10** The sealing assembly shall close towards the seat when water flow ceases. Springs shall be permitted to ensure full and proper seating.

## 4.8 Leakage (see 6.4)

**4.8.1** There shall be no leakage, permanent distortion or rupture of a valve when an internal pressure of twice the rated working pressure is applied for 5 min with the sealing assembly open in accordance with 6.4.1.

**4.8.2** There shall be no leakage, permanent distortion or rupture of a valve at an internal pressure of twice the rated working pressure applied to the downstream side of the sealing assembly for 5 min with the upstream end vented in accordance with 6.4.2.2.

**4.8.3** A valve shall not leak while being subjected to an internal hydrostatic pressure equivalent to a column of water 1,5 m high for 16 h in accordance with 6.4.2.3.



## 4.9 Non-metallic components (excluding gaskets, seals and other elastomeric parts) (see 6.5 and 6.6)



Non-metallic valve parts that may affect proper valve function as defined in this document shall be subjected to the applicable aging of its non-metallic parts, as described in 6.5 and 6.6, using separate sets of samples, as applicable. After aging, a valve shall meet the requirements of 4.8 when tested in accordance with the applicable tests described in 6.5 and 6.6.



## 4.10 Sealing assembly elements (see 6.7)

A seal made of elastomeric or other resilient materials shall not adhere to the mating surface when tested in accordance with 6.7.1. Where the same design of seat is used for more than one size of valve, it shall be permitted to only test the size with the highest stress on the seating surface.

## 4.11 Clearances

**4.11.1** The radial clearance between a sealing assembly and the inside walls in every position, except wide open, shall not be less than 12 mm for cast iron bodies and shall not be less than 6 mm if the body and sealing assembly are of cast iron or steel with corrosion protective coatings tested in accordance with 6.10, non-ferrous material, stainless steel or materials having equivalent physical, mechanical and corrosion resistant properties. See Figure 1 a).

**4.11.2** Any space in which the sealing assembly can trap debris beyond the seat shall be not less than 3 mm deep.

**4.11.3** Sealing assembly guide bushings or bearings shall project a sufficient axial distance to maintain not less than 1,5 mm (Bushing Projection) clearance between ferrous metal parts. See Figure 1. Clearance less than 1,5 mm shall be permitted where adjacent parts are of bronze, brass, Monel metal, austenitic stainless steel, titanium, or similar corrosion resistant materials. When corrosion resistance of steel parts is provided by a protective coating, the parts shall show no visible signs of deterioration of the coating such as blistering, delamination, flaking or increased resistance to movement when tested in accordance with 6.10.

 

### 4.11.4 Requirements for clapper type check valves

a) There shall be a diametrical clearance of not less than 3 mm between the inner edges of a seat ring and the metal parts of a hinged sealing assembly when the valve is in the closed position. See Figure 1 b).

b) The diametrical clearance between hinge pins and their bearings shall be not less than 0,125 mm.

c) The total axial clearance between the clapper hinge and adjacent valve body bearing surfaces shall be not less than 0,25 mm. See Figure 1 c) or Figure 1 d).

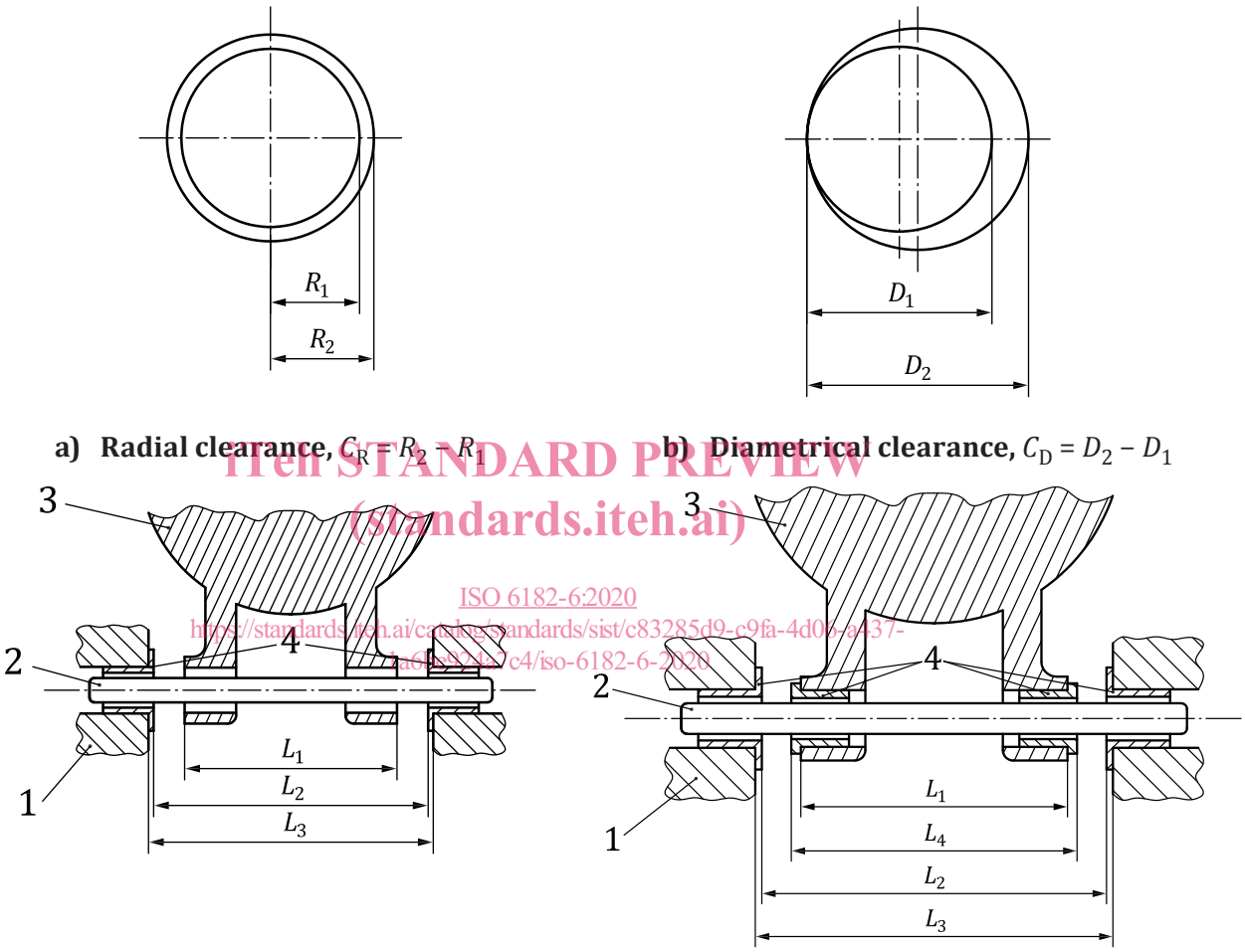


**a) Radial clearance,** $C_R = R_2 - R_1$

**b) Diametrical clearance,** $C_D = D_2 - D_1$

**c) Total axial clearance,** $C_{TA}$
$C_{TA} = L_2 - L_1$; **Bushing Projection** = $(L_3 - L_2)/2$

**d) Total axial clearance,** $C_{TA}$
$C_{TA} = L_2 - L_4$



**Key**

1 valve body
2 pin
3 sealing assembly
4 bushings

**Figure 1 — Types of clearances**

### 4.11.5 Requirements for non-clapper type check valves

a) Any reciprocating guide components, which are essential to allow a valve to open, shall have a minimum diametrical clearance of not less than 0,7 mm in that portion over which the moving