SLOVENSKI STANDARD
oSIST prEN 4036:2020

01-september-2020

Aeronavtika - Nastavljivi drsni zgibi s samovarovalnim dvorednim nihalnim krogličnim ležajem in navojnim steblom iz korozijsko odpornega jekla z zmanjšanim radialnim ohlapom ležaja - Mere in nosilnosti

Aerospace series - Rod end, adjustable, with self-aligning double row ball bearing and threaded shank, in corrosion resisting steel, reduced internal radial clearance - Dimensions and loads

Luft- und Raumfahrt - Einstellbarer Ösenkopf mit zweireihigem Pendelkugellager und Gewindeschaft aus korrosionsbeständigem Stahl, reduzierte radiale Lagerluft - Maße und Belastungen

Série aérospatiale - Embout réglable, à roulement à rotule sur deux rangées de billes et tige filetée, en acier résistant à la corrosion, jeu interne radial réduit - Dimensions et charges

Ta slovenski standard je istoveten z: prEN 4036

ICS:

49.035	Sestavni deli za letalsko in vesoljsko gradnjo	Components for aerospace construction

oSIST prEN 4036:2020 **en,fr,de**

EUROPEAN STANDARD

NORME EUROPÉENNE

EUROPÄISCHE NORM

DRAFT
prEN 4036

July 2020

ICS 49.035

Will supersede EN 4036:2006

English Version

Aerospace series - Rod end, adjustable, with self-aligning double row ball bearing and threaded shank, in corrosion resisting steel, reduced internal radial clearance - Dimensions and loads

Série aérospatiale - Embout réglable, à roulement à rotule sur deux rangées de billes et tige filetée, en acier résistant à la corrosion, jeu interne radial réduit - Dimensions et charges

Luft- und Raumfahrt - Einstellbarer Ösenkopf mit zweireihigem Pendelkugellager und Gewindeschaft aus korrosionsbeständigem Stahl, reduzierte radiale Lagerluft - Maße und Belastungen

This draft European Standard is submitted to CEN members for enquiry. It has been drawn up by the Technical Committee ASD-STAN.

If this draft becomes a European Standard, CEN members are bound to comply with the CEN/CENELEC Internal Regulations which stipulate the conditions for giving this European Standard the status of a national standard without any alteration.

This draft European Standard was established by CEN in three official versions (English, French, German). A version in any other language made by translation under the responsibility of a CEN member into its own language and notified to the CEN-CENELEC Management Centre has the same status as the official versions.

CEN members are the national standards bodies of Austria, Belgium, Bulgaria, Croatia, Cyprus, Czech Republic, Denmark, Estonia, Finland, France, Germany, Greece, Hungary, Iceland, Ireland, Italy, Latvia, Lithuania, Luxembourg, Malta, Netherlands, Norway, Poland, Portugal, Republic of North Macedonia, Romania, Serbia, Slovakia, Slovenia, Spain, Sweden, Switzerland, Turkey and United Kingdom.

Recipients of this draft are invited to submit, with their comments, notification of any relevant patent rights of which they are aware and to provide supporting documentation.

Warning : This document is not a European Standard. It is distributed for review and comments. It is subject to change without notice and shall not be referred to as a European Standard.

EUROPEAN COMMITTEE FOR STANDARDIZATION
COMITÉ EUROPÉEN DE NORMALISATION
EUROPÄISCHES KOMITEE FÜR NORMUNG

CEN-CENELEC Management Centre: Rue de la Science 23, B-1040 Brussels

Ref. No. prEN 4036:2020 E

Contents

Page

European foreword

This document (prEN 4036:2020) has been prepared by the Aerospace and Defence Industries Association of Europe – Standardization (ASD-STAN).

After enquiries and votes carried out in accordance with the rules of this Association, this Standard has received the approval of the National Associations and the Official Services of the member countries of ASD, prior to its presentation to CEN.

This document is currently submitted to the CEN Enquiry.

This document will supersede EN 4036:2006.

1 Scope

This document specifies the characteristics of adjustable rod ends with self-aligning double row ball bearing with reduced internal radial clearance and threaded shank in corrosion resisting steel, designed to withstand only slow rotations and oscillations under load.

They consist of:

— a rod end comprising:

  — circumferential groove to identify location;

  — either seals or shields;

  — an optional longitudinal groove for locking purpose;

— an inner ring with balls.

These rod ends are intended for use with flight control rods or rods for aerospace structures.

They are intended to be used in the temperature range: −54 °C to 150 °C.

However, being lubricated with the following greases:

— very high pressure grease, ester type (code A), operational range −73 °C to 121 °C; or

— very high pressure grease, synthetic hydrocarbons, general purpose (code B), operational range −54 °C to 177 °C (see EN 2067);

their field of application when lubricated with code A grease is limited to 121 °C.

2 Normative references

The following documents are referred to in the text in such a way that some or all of their content constitutes requirements of this document. For dated references, only the edition cited applies. For undated references, the latest edition of the referenced document (including any amendments) applies.

EN 2030, *Aerospace series — Steel X105CrMo17 (1.3544) — Hardened and tempered — Bars — De ≤ 150 mm*

EN 2067, *Aerospace series — Rod ends with self-aligning ball bearings — Technical specification*

EN 2226, *Aerospace series — Steel X105CrMo17 (1.4125) — Hardened and tempered — Hand and die forgings — De ≤ 150 mm*

EN 2424, *Aerospace series — Marking of aerospace products*

EN 3490, *Aerospace series — Steel FE-PM3901 (X15CrNi17-3) — Air melted — Hardened and tempered — Bar for machining — De ≤ 200 mm — 900 MPa ≤ Rm ≤ 1 100 MPa*

ISO 1132-1, *Rolling bearings — Tolerances — Part 1: Terms and definitions*

ISO 3353-1, *Aerospace — Lead and runout threads — Part 1: Rolled external threads*

ISO 5855-2, *Aerospace — MJ threads — Part 2: Limit dimensions for bolts and nuts*

ISO 8074, *Aerospace — Surface treatment of austenitic stainless steel parts*

ISO 8075, *Aerospace — Surface treatment of hardenable stainless steel parts*

TR 3775, *Aerospace series — Bolts and pins — Materials*[1]

3 Terms and definitions

For the purposes of this document, the terms and definitions given in ISO 1132-1 apply.

ISO and IEC maintain terminological databases for use in standardization at the following addresses:

— ISO Online browsing platform: available at https://www.iso.org/obp.ui

— IEC Electropedia: available at http://www.electropedia.org/

Symbols of limit deviations are in accordance with definitions of ISO 1132-1.

Δds	deviation of a single bore diameter
Δdmp	single plane mean bore diameter deviation
C_s	permissible static radial load
$F_{a\ max.}$	permissible static axial load

4 Required characteristics

4.1 Dimensions — Tolerances — Masses

Configuration: see Figure 1; the bearings are fitted with either seals or shields.

Values: see Figure 1 and Table 1: values after surface treatment.

4.2 Surfaces roughness

Rolling elements and raceway: R_a = 0,2 µm

Bore, side faces and cylindrical outer surface: R_a = 0,8 µm

For code T values prior to the surface treatment

4.3 Materials

Rod end: Steel EN 3490 or TR 3775; heat treated to obtain:

— by case hardening, hardening and tempering a surface hardness of ≥ 58 HRC on the raceway;

— by hardening and tempering to a strength of R_m > 830 MPa on the whole rod end.

[1] Published as ASD-STAN Technical Report at the date of publication of this document by AeroSpace and Defence Industries Association of Europe – Standardization (ASD-STAN), www.asd-stan.org.

Bearing:

Inner ring: Steel EN 2030 or EN 2226, ≥ 58 HRC

Balls: Steel EN 2030 or EN 2226, ≥ 58 HRC

Seals: Polytetrafluoroethylene (PTFE) or glass fabric reinforced polytetrafluoroethylene (PTFE)

Shields: Corrosion resisting material

4.4 Surface treatment

Rod end: passivation ISO 8074

Bearing: passivation ISO 8075: code T

with no surface treatment: no code

4.5 Thread

MJ thread to ISO 5855-2, rolled

Right hand thread, code R

Left hand thread, code L

Break sharp edges and corners and remove all burrs and slivers

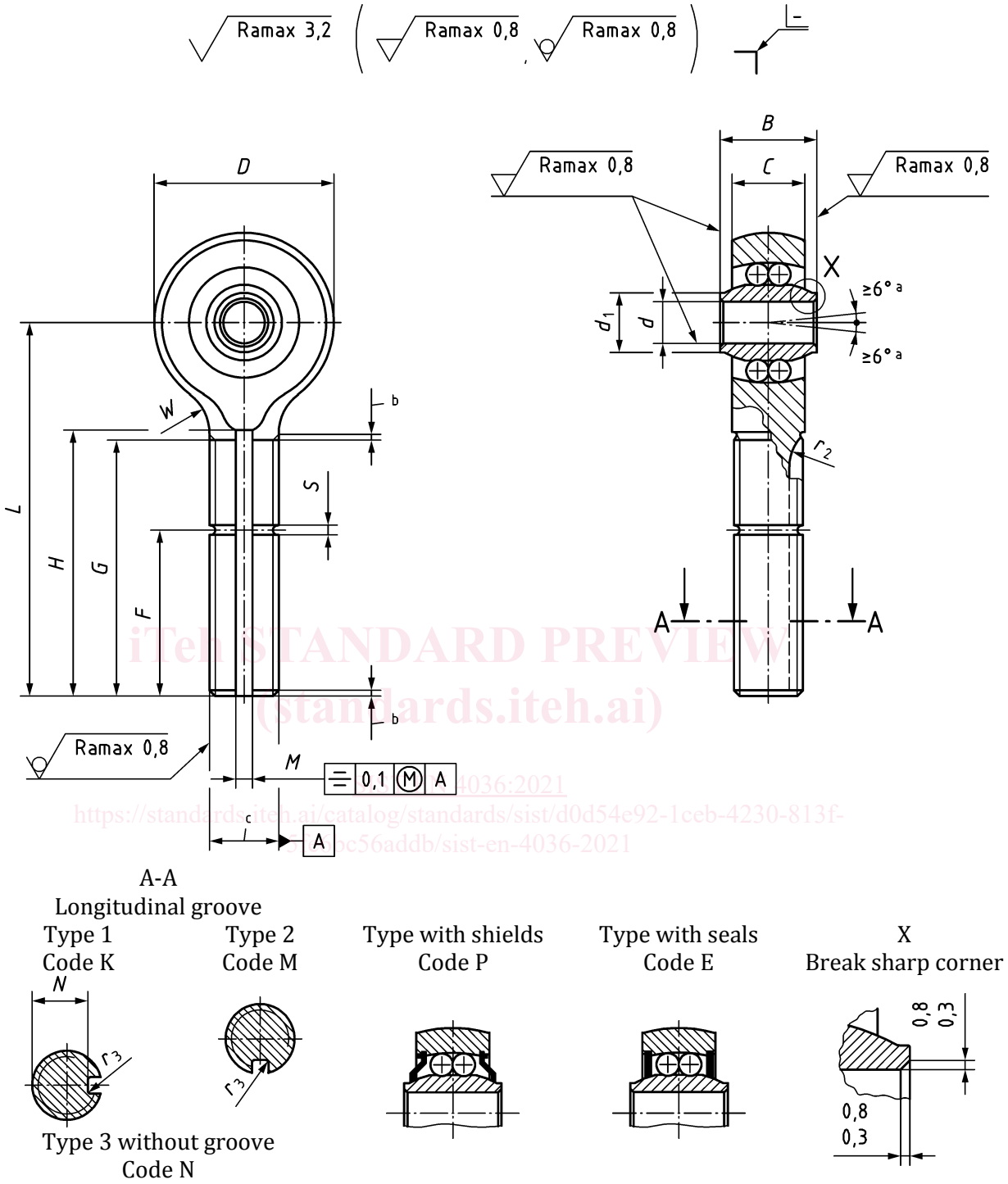

Key

a 6° min. The acceptance value is the maximum value for the user

b conform to ISO 3353-1

c thread

The circumferential groove and the longitudinal groove over the distance *F* shall be painted red.
The installation of seals and shields is at the manufacturer's option.

NOTE The dimensions shown in Figure 1 are given in Table 1.

Figure 1

Table 1

Dimensions in millimetres

Diameter d				B	C	D	d_1	Thread [a]	F [b]
Code	**Nominal**	**Tolerance** µm Δdmp	Δds	$\frac{0}{-0,12}$	$\frac{+0,1}{0}$	$\frac{+0,2}{0}$	min.		min.
05	5	$\frac{0}{-8}$	0 − 10	12	8,5	20,5	7,6	MJ 8 × 1,00–4h6h	18
06	6			14	10	22,5	8,6	MJ 10 × 1,25–4h6h	23
08	8			15		28,5	11,1	MJ 12 × 1,25–4h6h	27
10	10			20	14	32,0	13,6	MJ 14 × 1,50–4h6h	31

(continued)

(concluded)

Code	G [c] min.	H $\frac{+0,5}{0}$	L ±0,5	M $\frac{+0,1}{0}$	N $\frac{0}{-0,1}$	r_1	r_2 ±0,5	r_3	S ±0,2	W REF	**Mass** g/piece ≈
05	33	33	48	1,6	6,6	0,3 to 0,8	6,5	0,1 to 0,5	1,4	6	35
06	37	37	54	2,4	8,0					7	60
08	42	42	62		10,2				2,0		85
10	48	48	73	3,2	12,2					10	130

[a] See ISO 5855-2.

[b] F = minimum length of engaged thread: included thickness of lock washer and height of nut.

[c] G = minimum length of usable thread.