INTERNATIONAL STANDARD

ISO 21308-7

First edition
2018-10

Road vehicles — Product data exchange between chassis and body work manufacturers (BEP) —

Part 7: Coding of skip loader bodywork

Véhicules routiers — Échange de données de produit entre les fabricants de châssis et de carrosseries (BEP) —

Partie 7: Codage des multibennes

iTeh Standards
(https://standards.iteh.ai)
Document Preview

ISO 21308-7:2018
https://standards.iteh.ai/catalog/standards/iso/c8546052-278e-46a0-9e64-249f029181ba/iso-21308-7-2018

Reference number
ISO 21308-7:2018(E)

© ISO 2018

iTeh Standards
(https://standards.iteh.ai)
Document Preview

ISO 21308-7:2018
https://standards.iteh.ai/catalog/standards/iso/c8546052-278e-46a0-9e64-249f029181ba/iso-21308-7-2018

COPYRIGHT PROTECTED DOCUMENT

© ISO 2018

All rights reserved. Unless otherwise specified, or required in the context of its implementation, no part of this publication may be reproduced or utilized otherwise in any form or by any means, electronic or mechanical, including photocopying, or posting on the internet or an intranet, without prior written permission. Permission can be requested from either ISO at the address below or ISO's member body in the country of the requester.

ISO copyright office
CP 401 • Ch. de Blandonnet 8
CH-1214 Vernier, Geneva
Phone: +41 22 749 01 11
Fax: +41 22 749 09 47
Email: copyright@iso.org
Website: www.iso.org

Published in Switzerland

 © ISO 2018 – All rights reserved

Contents

Page

Foreword ... **iv**

Introduction ... **v**

1 Scope ... **1**

2 Normative references ... **1**

3 Terms and definitions ... **1**

4 Coding principles ... **4**
4.1 BEP codes of bodywork for hook loaders ... 4
4.2 Units of BEP code values ... 4
4.3 References for measurements ... 5
4.3.1 Global coordinate system (X, Y, Z) ... 5
4.3.2 Skip loader coordinate system ... 5
4.4 Related XML coding ... 7

5 Coding of geometrical data and space requirements ... **8**
5.1 Installation of skip loader on vehicle ... 8
5.2 Main dimensions skip loaders ... 9
5.2.1 Transport position ... 9
5.2.2 Tipping position ... 17
5.2.3 Loading/unloading position ... 18

6 Coding of container dimensions and features necessary for the handling ... **21**

7 Coding of masses ... **24**
7.1 Mass point in transport position ... 24
7.2 Mass point in working position ... 25
7.3 Mass point for container ... 25

8 Coding of general skip loader data ... **26**
8.1 General skip loader data ... 26
8.2 Mechanical interfaces to truck ... 26
8.3 Mechanical interfaces to container ... 26
8.4 Hydraulics equipment and interfaces ... 27
8.5 Electrical/electronic equipment and interfaces ... 27

Annex A (normative) **XML coding related to this document** ... **28**

Annex B (informative) **Overview of container dimension standards and specifications** ... **30**

Bibliography ... **31**

iTeh Standards
(https://standards.iteh.ai)
Document Preview
ISO 21308-7:2018
https://standards.iteh.ai/catalog/standards/sist/2278e-46a0-9eb4-249f029181ba/iso-21308-7-2018

© ISO 2018 – All rights reserved

Foreword

ISO (the International Organization for Standardization) is a worldwide federation of national standards bodies (ISO member bodies). The work of preparing International Standards is normally carried out through ISO technical committees. Each member body interested in a subject for which a technical committee has been established has the right to be represented on that committee. International organizations, governmental and non-governmental, in liaison with ISO, also take part in the work. ISO collaborates closely with the International Electrotechnical Commission (IEC) on all matters of electrotechnical standardization.

The procedures used to develop this document and those intended for its further maintenance are described in the ISO/IEC Directives, Part 1. In particular the different approval criteria needed for the different types of ISO documents should be noted. This document was drafted in accordance with the editorial rules of the ISO/IEC Directives, Part 2 (see www.iso.org/directives).

Attention is drawn to the possibility that some of the elements of this document may be the subject of patent rights. ISO shall not be held responsible for identifying any or all such patent rights. Details of any patent rights identified during the development of the document will be in the Introduction and/or on the ISO list of patent declarations received (see www.iso.org/patents).

Any trade name used in this document is information given for the convenience of users and does not constitute an endorsement.

For an explanation on the voluntary nature of standards, the meaning of ISO specific terms and expressions related to conformity assessment, as well as information about ISO's adherence to the World Trade Organization (WTO) principles in the Technical Barriers to Trade (TBT) see the following URL: www.iso.org/iso/foreword.html.

This document was prepared by Technical Committee ISO/TC 22, *Road vehicles*, Subcommittee SC 40, *Specific aspects for light and heavy commercial vehicles, busses and trailers*.

Any feedback or questions on this document should be directed to the user's national standards body. A complete listing of these bodies can be found at www.iso.org/members.html.

A list of all parts in the ISO 21308 series can be found on the ISO website.

iTeh Standards
(https://standards.iteh.ai)
Document Preview
ISO 21308-7:2018
https://standards.iteh.ai/catalog/standards/iso/c8546052-278e-46a0-9e64-249f029181ba/iso-21308-7-2018

 © ISO 2018 – All rights reserved

Introduction

Based on the ISO BEP (bodywork exchange parameters) system, this document specifically deals with the coding of dimensions and other characteristics of skip loaders. The aim is to ensure an efficient and unambiguous communication of dimensional installation data between the parties involved.

The document also covers coding of characteristics of hydraulic, electrical and electronic interfaces to the vehicle.

The document is useful for all parties involved in the installation of skip loaders to vehicles, e.g. skip loader manufacturers, truck chassis manufacturers, and bodywork manufacturers.

iTeh Standards
(https://standards.iteh.ai)
Document Preview

ISO 21308-7:2018
https://standards.iteh.ai/catalog/standards/iso/c8546052-278e-46a0-9e64-249f029181ba/iso-21308-7-2018

© ISO 2018 – All rights reserved

iTeh Standards
(https://standards.iteh.ai)
Document Preview

ISO 21308-7:2018
https://standards.iteh.ai/catalog/standards/iso/c8546052-278e-46a0-9e64-249f029181ba/iso-21308-7-2018

Road vehicles — Product data exchange between chassis and body work manufacturers (BEP) —

Part 7: Coding of skip loader bodywork

1 Scope

This document series describes a generic system for the exchange of data between truck chassis manufacturers and bodywork manufacturers. It applies to commercial vehicles as defined in ISO 3833, having a maximum gross vehicle mass above 3 500 kg.

The process of exchanging the above information can involve:

— chassis manufacturer;

— chassis importer;

— chassis dealer;

— one or more bodywork manufacturers; and

— bodywork component suppliers, e.g. manufacturers of demountable bodies, cranes and loading equipment, tipping equipment.

iTeh Standards
(https://standards.iteh.ai)
Document Preview

This document specifically deals with the coding of dimensions and other characteristics of skip loaders, to ensure an efficient and unambiguous communication of installation data between the parties involved.

ISO 21308-7:2018
https://standards.iteh.ai/catalog/standards/iso/c8546052-278e-46a0-9e64-249f029181ba/iso-21308-7-2018

2 Normative references

The following documents are referred to in the text in such a way that some or all of their content constitutes requirements of this document. For dated references, only the edition cited applies. For undated references, the latest edition of the referenced document (including any amendments) applies.

ISO 21308-1, *Road vehicles — Product data exchange between chassis and bodywork manufacturers (BEP) — Part 1: General principles*

ISO 21308-2, *Road vehicles — Product data exchange between chassis and bodywork manufacturers (BEP) — Part 2: Dimensional bodywork exchange parameters*

ISO 21308-3, *Road vehicles — Product data exchange between chassis and bodywork manufacturers (BEP) — Part 3: General, mass and administrative exchange parameters*

3 Terms and definitions

For the purposes of this document the terms and definitions given in ISO 21308-2 and the following apply.

ISO and IEC maintain terminological databases for use in standardization at the following addresses:

— IEC Electropedia: available at https://www.electropedia.org/

— ISO Online browsing platform: available at https://www.iso.org/obp

© ISO 2018 – All rights reserved

3.1
skip loader
vehicle mounted powered equipment comprising of two arms moving around a pivoting axis, using chains or similar for loading, unloading and tipping containers and other demountables

Note 1 to entry: Arms are usually moving in parallel. They may be fixed, extendable or articulated.

Note 2 to entry: Figure 1 shows the main parts of a skip loader referred to in this document.

iTeh Standards
(https://standards.iteh.ai)
Document Preview

ISO 21308-7:2018
https://standards.iteh.ai/catalog/standards/iso/c8546052-278e-46a0-9e64-249f029181ba/iso-21308-7-2018

© ISO 2018 – All rights reserved

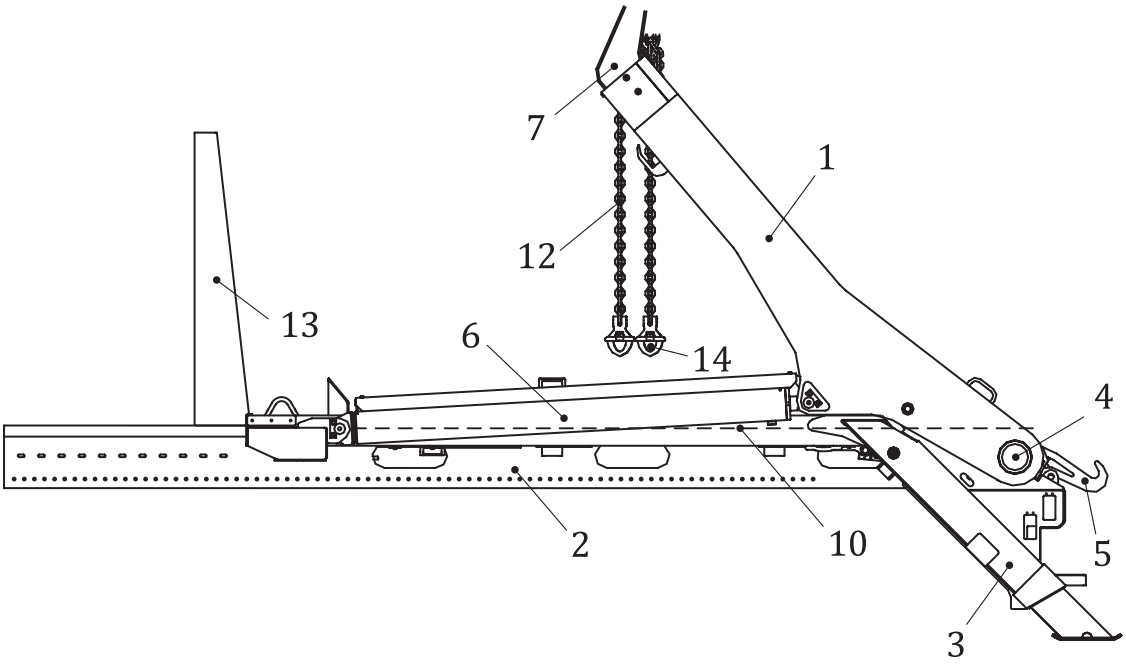

a) Skip loader with extension arm

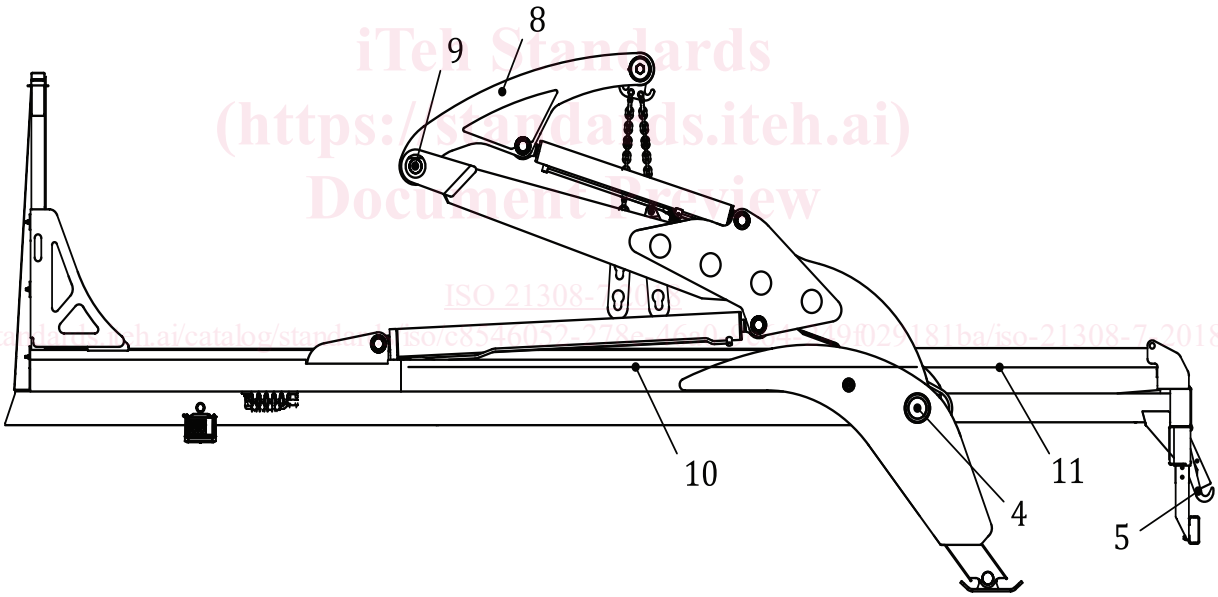

b) Skip loader with articulation arm and extended load bed

Key

1	main arm	8	articulation arm
2	subframe	9	articulation arm pivot point
3	stabilizer leg(s)	10	load bed (hidden)
4	main arm pivot point	11	extended load bed
5	tipping hook	12	lifting chain
6	main arm cylinder	13	cabin protection guard
7	extension arm	14	lifting connector

Figure 1 — Main parts of skip loader

iTeh Standards
(https://standards.iteh.ai)
Document Preview
ISO 21308-7:2018

4 Coding principles

4.1 BEP codes of bodywork for hook loaders

Each characteristic, related to the hook loader and its interfaces to truck chassis, is assigned a code composed of the items given below. A prefix “BEP”, followed by a dash (-), shall be used to avoid confusion with other coding systems.

BEP codes are formatted according to the principles in Table 1.

Table 1 — BEP coding principles

BEP-ppMccc.n.p.q.s.t		
Item	**Assignment**	**Description**
pp	Bodywork category	pp = **None or 00** for codes related to vehicle chassis (ISO 21308-2 and ISO 21308-3) pp = **01** for codes related to loader cranes (ISO 21308-5) pp = **02** for codes related to hook loaders (ISO 21308-6) pp = **03** for codes related to skip loaders (ISO 21308-7) Future parts of the ISO 21308 series may introduce new pp numbers.
M	Measure type	A capital letter, which denotes the type of code: H = Z direction, coordinate system in accordance with ISO 4130 L = X direction, coordinate system in accordance with ISO 4130 W = Y direction, coordinate system in accordance with ISO 4130 C = Coordinate (x,y) or (x,y,z) in the Cartesian coordinate system R = Radius V = Angle M = Mass (m), or mass point (m,x,y,z) F = Force (static or dynamic) T = Moment (static or dynamic) G = General A = Administrative
ccc	BEP code number	Code number given by the standard
.n	Index number	.n is used to designate object number n
.p	Entity number	.p is used to designate a certain set of object characteristics or entities (e.g. dimensions, coordinates, address information) Where both .n and .p are specified, they are given in the .n .p order.
.q	Corner number	.q is used to designate contour corner index number
.s	Side designator	L or R
.t	Type designator	.t is used to designate a certain type (e.g. "Rigid" or "Flexible")

NOTE Dimensions, except for radius, can be positive or negative.

4.2 Units of BEP code values

The following units are preferred when reporting values related to BEP codes (see also ISO 21308-1):

— dimensions (L, W, H, R) and coordinates (x, y, z) in millimetres (mm);

— masses in kilograms (kg);

iTeh Standards (https://standards.iteh.ai) Document Preview
ISO 21308-7:2018
https://standards.iteh.ai/catalog/standards/iso/c8546052-278e-46a0-9e64-249f029181ba/iso-21308-7-2018

 © ISO 2018 – All rights reserved

— forces in Newtons (N), or kN;

— moments in Newtonmetres (Nm), or kNm; and

— angles in degrees (°).

NOTE Guidance on units is shown in the unit column for each BEP code.

4.3 References for measurements

4.3.1 Global coordinate system (X, Y, Z)

A vehicle coordinate system according to ISO 4130 is applied, see Figure 2. Global coordinates for the vehicle are denominated X, Y and Z (uppercase letters).

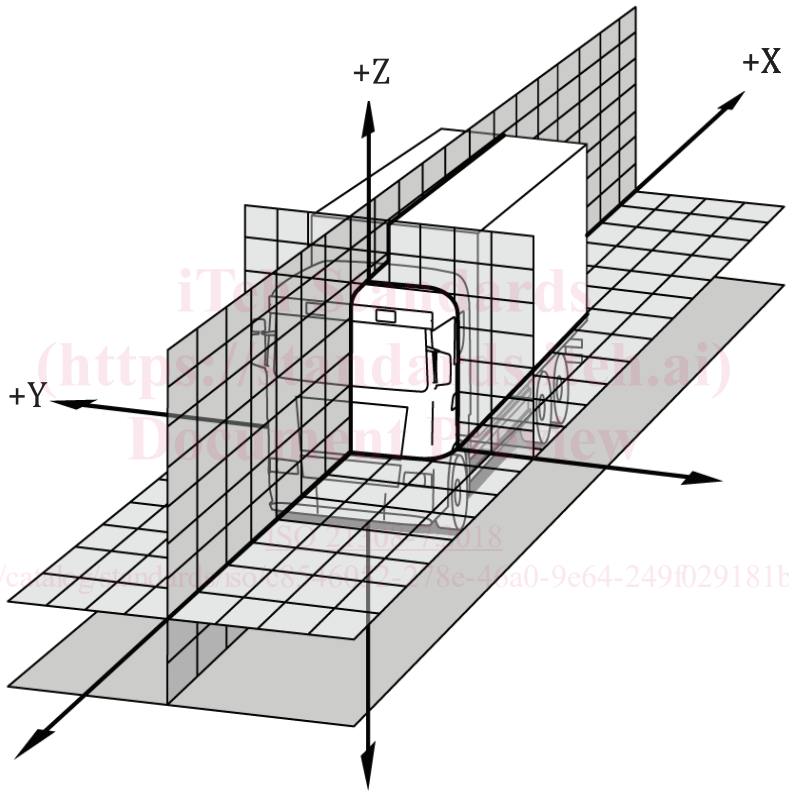

iTeh Standards
(https://standards.iteh.ai)
Document Preview
ISO 21308-7:2018
https://standards.iteh.ai/catalog/standards/iso/2e...78e-4...a0-9e64-249f029181ba/iso-21308-7-2018

Figure 2 — Vehicle coordinate system according to ISO 4130

4.3.2 Skip loader coordinate system

For a default mounting position, the principle should be that the skip loader coordinate directions should coincide with those of the vehicle. Local bodywork coordinates are denominated x, y and z (lowercase letters), see Figure 3.

© ISO 2018 – All rights reserved