FINAL
DRAFT

INTERNATIONAL
STANDARD

**ISO/FDIS
11093-5**

ISO/TC **6**

Secretariat: SCC

Voting begins on:
2015-09-25

Voting terminates on:
2015-11-25

Paper and board — Testing of cores —

Part 5:
Determination of characteristics of concentric rotation

Papier et carton — Essais des mandrins —

Partie 5: Détermination des caractéristiques de rotation

iTeh STANDARD PREVIEW
(standards.iteh.ai)
Full standard:
https://standards.iteh.ai/catalog/standards/sist/4fa0fbe-bc41-40ef-9e37-900a23edc4b8/iso-11093-5-2016

RECIPIENTS OF THIS DRAFT ARE INVITED TO SUBMIT, WITH THEIR COMMENTS, NOTIFICATION OF ANY RELEVANT PATENT RIGHTS OF WHICH THEY ARE AWARE AND TO PROVIDE SUPPORTING DOCUMENTATION.

IN ADDITION TO THEIR EVALUATION AS BEING ACCEPTABLE FOR INDUSTRIAL, TECHNOLOGICAL, COMMERCIAL AND USER PURPOSES, DRAFT INTERNATIONAL STANDARDS MAY ON OCCASION HAVE TO BE CONSIDERED IN THE LIGHT OF THEIR POTENTIAL TO BECOME STANDARDS TO WHICH REFERENCE MAY BE MADE IN NATIONAL REGULATIONS.

Reference number
ISO/FDIS 11093-5:2015(E)

© ISO 2015

iTeh STANDARD PREVIEW
(standards.iteh.ai)
Full standard:
https://standards.iteh.ai/catalog/standards/sist/4fa0ffbe-bc41-40ef-9e37-900a23edc4b8/iso-11093-5-2016

COPYRIGHT PROTECTED DOCUMENT

© ISO 2015, Published in Switzerland

All rights reserved. Unless otherwise specified, no part of this publication may be reproduced or utilized otherwise in any form or by any means, electronic or mechanical, including photocopying, or posting on the internet or an intranet, without prior written permission. Permission can be requested from either ISO at the address below or ISO's member body in the country of the requester.

ISO copyright office
Ch. de Blandonnet 8 • CP 401
CH-1214 Vernier, Geneva, Switzerland
Tel. +41 22 749 01 11
Fax +41 22 749 09 47
copyright@iso.org
www.iso.org

© ISO 2015 – All rights reserved

Contents

Page

Foreword ..... **iv**

1 Scope **1**

2 Normative references **1**

3 Principles **1**
3.1 Determination of roundness deviation (f_R) by three-point measurement 1
3.2 Determination of the straightness deviation (f_S) by five-point measurement 1

4 Apparatus **1**

5 Preparation of test pieces **2**
5.1 Sampling 2
5.2 Test pieces 2
5.3 Conditioning of test pieces 2

6 Measuring procedure **3**
6.1 General 3
6.2 Positioning of the support 3
6.3 Measuring of roundness deviation 3
6.4 Measuring of straightness deviation 3
6.4.1 Straightness deviation 3
6.4.2 Precision of the measurement system 3

7 Calculation **4**

8 Test report **4**

iTeh STANDARD PREVIEW
(standards.iteh.ai)
Full standard:
https://standards.iteh.ai/catalog/standards/sist/4fa0ffbe-bc41-40ef-9e37-900a23edc4b8/iso-11093-5-2016

© ISO 2015 – All rights reserved

Foreword

ISO (the International Organization for Standardization) is a worldwide federation of national standards bodies (ISO member bodies). The work of preparing International Standards is normally carried out through ISO technical committees. Each member body interested in a subject for which a technical committee has been established has the right to be represented on that committee. International organizations, governmental and non-governmental, in liaison with ISO, also take part in the work. ISO collaborates closely with the International Electrotechnical Commission (IEC) on all matters of electrotechnical standardization.

International Standards are drafted in accordance with the rules given in the ISO/IEC Directives, Part 2.

The main task of technical committees is to prepare International Standards. Draft International Standards adopted by the technical committees are circulated to the member bodies for voting. Publication as an International Standard requires approval by at least 75 % of the member bodies casting a vote.

Attention is drawn to the possibility that some of the elements of this document may be the subject of patent rights. ISO shall not be held responsible for identifying any or all such patent rights.

The committee responsible for this document is ISO/TC 6, *Paper, board and pulps*.

This third edition cancels and replaces the second edition (ISO 11093-5:2009), which constitutes a minor revision to include 6.4.2. It also incorporates the Technical Corrigendum ISO 11093-5:2009/Cor 1:2010.

ISO 11093 consists of the following parts, under the general title *Paper and board — Testing of cores*:

— *Part 1: Sampling*

— *Part 2: Conditioning of test samples*

— *Part 3: Determination of moisture content using the oven drying method*

— *Part 4: Measurement of dimensions*

— *Part 5: Determination of characteristics of concentric rotation*

— *Part 6: Determination of bending strength by the three-point method*

— *Part 7: Determination of flexural modulus by the three-point method*

— *Part 8: Determination of natural frequency and flexural modulus by experimental modal analysis*

— *Part 9: Determination of flat crush resistance*

iTeh STANDARD PREVIEW
(standards.iteh.ai)
Full standard:
https://standards.iteh.ai/catalog/standards/sist/4fa0ffb-b341-4eef-9e37-90ea23edc4b8/iso-11093-5-2015

 © ISO 2015 – All rights reserved

Paper and board — Testing of cores —

Part 5: Determination of characteristics of concentric rotation

1 Scope

This part of ISO 11093 specifies a method for determining the characteristics of concentric rotation of cylindrical board cores which meet the following criteria:

— minimum wall thickness: 5 mm;

— minimum external diameter: 60 mm;

— maximum sample length: 3 200 mm.

2 Normative references

The following documents, in whole or in part, are normatively referenced in this document and are indispensable for its application. For dated references, only the edition cited applies. For undated references, the latest edition of the referenced document (including any amendments) applies.

ISO 11093–1, *Paper and board — Testing of cores — Part 1: Sampling*

ISO 11093–2, *Paper and board — Testing of cores — Part 2: Conditioning of test samples*

iTeh STANDARD PREVIEW
(standards.iteh.ai)
Full standard:
https://standards.iteh.ai/catalog/standards/sist/4fa0ffbe-bc41-40ef-9e37-900a22edc448/iso-11093-5-2016

3 Principles

3.1 Determination of roundness deviation (f_R) by three-point measurement

Measurement between three points in a plane perpendicular to the core axis where two points are fixed in predetermined positions and the third moves in the direction of the measurement.

3.2 Determination of the straightness deviation (f_S) by five-point measurement

Measurement between five points in planes perpendicular to the core axis where four measuring points are fixed in pairs in predetermined positions in two planes perpendicular to the core axis, and the fifth in a central plane perpendicular to the core axis moves in the direction of the measurement.

4 Apparatus

The apparatus, shown in Figure 1, consists of two supports (2), a rack (1), and two measuring heads (4 and 5). Each support consists of two free rotating support rollers mounted side by side (3) where the distance between the two can be adjusted. The diameter of each roller shall be (85 ± 1) mm and the width shall be (19 ± 1) mm. For example, a 6209 roller bearing can be used.

Each measuring head consists of a flat foot with a diameter of 10 mm, a rod which transmits the vertical movement of the foot to a dial gauge and a dial gauge graduated in 0,01 mm, accurate to at least 0,005 mm. The load exerted by each measuring foot on the test piece is approximately 1,2 N. One of the measuring heads (4) is fixed directly above the mid-point between one pair of support rollers. The other measuring head (5) is moveable parallel to the rack.

© ISO 2015 – All rights reserved

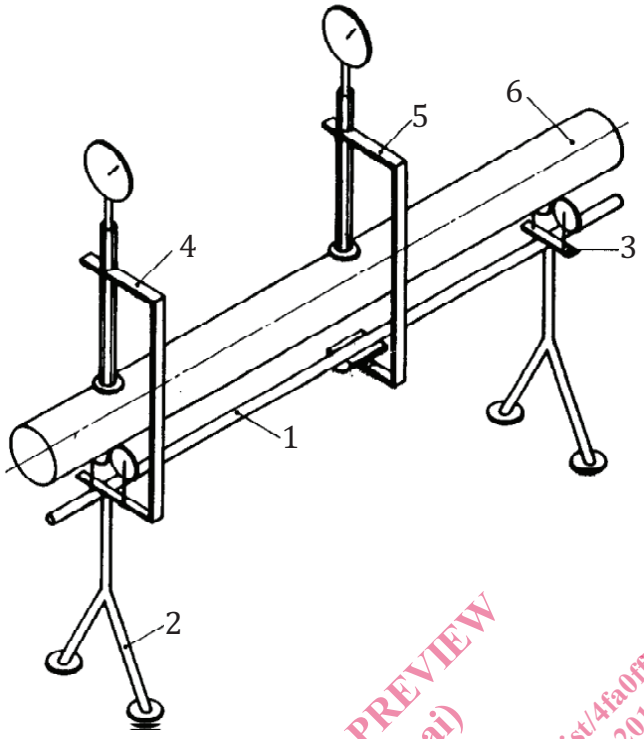

Key

1 rack
2 supports
3 support rollers
4 measuring head
5 measuring head, moveable
6 test piece

iTeh STANDARD PREVIEW
(standards.iteh.ai)
Full standard:
https://standards.iteh.ai/catalog/standards/sist/4fa0ffbe-bc41-40ef-9e37-900a23edc4b8/iso-11093-5-2016

Figure 1 — Schematic representation of the apparatus

5 Preparation of test pieces

5.1 Sampling

Sampling shall be carried out in accordance with ISO 11093-1.

5.2 Test pieces

For cores less than 3 200 mm long, the complete undamaged core shall be tested.

For cores more than 3 200 mm long, a test piece from 1 200 mm to 3 200 mm long shall be cut. If there is an obvious difference in warpage between various positions of the long core, the test piece shall be taken from where the warpage is greatest.

5.3 Conditioning of test pieces

The test pieces shall be conditioned in accordance with ISO 11093-2.

© ISO 2015 – All rights reserved

6 Measuring procedure

6.1 General

Measuring shall be carried out in a standard atmosphere identical to that used for the conditioning (see 5.3). The measuring heads shall not produce any measurable deformation of the test piece during measuring.

6.2 Positioning of the support

Adjust the distance between the two support rollers within each pair so that the tangents to the lines of the support of the core form an angle of 120° ± 5°. Adjust the distance between the inner faces of the two pairs of support rollers to the core length less (200 ± 10) mm. This is the test length. Position the core centrally on the support rollers.

6.3 Measuring of roundness deviation

Place the foot of the fixed measuring head in contact with the core so that it is centrally located with respect to the core axis and the line between the support-roller pair to an accuracy of ±1 mm. Rotate the core through 360° and record the highest and lowest readings of the gauge to an accuracy of ±0,01 mm. The difference between the two readings is the individual value for the roundness deviation (f_R), expressed in millimetres.

6.4 Measuring of straightness deviation

6.4.1 Straightness deviation

Place the foot of the moveable measuring head in contact with the core so that it is centrally located with respect to the core axis at a point half-way between the two support-roller pairs. The measuring head placed at the half-way point is located with an accuracy of ±1 mm. Rotate the core through 360° and record the highest and lowest readings of the gauge to an accuracy of ±0,01 mm. Record the difference between the two readings. The straightness deviation (f_S) is half of this measured difference (x), determined with an accuracy of ±0,01 mm, as given in Formula (1):

$$f_S = \frac{x}{2} \tag{1}$$

where

f_S is the straightness deviation, in mm;

x is the measured difference, in mm.

6.4.2 Precision of the measurement system

Provided that the rack has the stiffness needed, the precision of the measurement system is sufficient for cores which have a straightness deviation ≥0,3 mm/m.

iTeh STANDARD PREVIEW
(standards.iteh.ai)
Full standard:
https://standards.iteh.ai/catalog/standards/sist/4fa0fbbc-bc41-4ef-9e37-90a23edc4b8/iso-11093-5-2016

© ISO 2015 – All rights reserved

To obtain comparable values for paper cores of different (support) lengths, the following conversion to millimetres per metre (mm/m), as given in Formula (2), shall be made:

$$f_S' = \frac{f_S * 1000}{l} \quad (2)$$

where

f_S' is the straightness deviation, in mm/m;

f_S is the straightness deviation, in mm [see Formula (1) in 6.4.1];

l is the distance between supports (inner measurement), in mm.

7 Calculation

Calculate the mean and standard deviation for the roundness deviation and straightness deviation to the nearest 0,01 mm.

8 Test report

The test report shall include the following information:

a) reference to this part of ISO 11093, i.e. ISO 11093-5;

b) type and designation of the cores tested;

c) place and date of sampling;

d) place and date of test;

e) number of test pieces;

f) core length;

g) test length;

h) mean and standard deviation of the roundness deviation (f_R);

i) mean and standard deviation of the straightness deviation (f_S);

j) date and signature;

k) any deviation from this part of ISO 11093 that might have affected the results.

iTeh STANDARD PREVIEW
(standards.iteh.ai)
Full standard:
https://standards.iteh.ai/catalog/standards/sist/4fa0ffbe-bc41-40ef-9e37-900a23edc4b8/iso-11093-5-2016

© ISO 2015 – All rights reserved

iTeh STANDARD PREVIEW
(standards.iteh.ai)
Full standard:
https://standards.iteh.ai/catalog/standards/sist/4fa0ffbe-bc41-40ef-9e37-900a23edc4b8/iso-11093-5-2016