SLOVENSKI STANDARD
oSIST prEN ISO 3611:2022

01-julij-2022

Specifikacija geometrijskih veličin izdelka (GPS) - Oprema za merjenje dolžin: mikrometri za zunanje meritve - Konstrukcijske in meroslovne značilnosti (ISO/DIS 3611:2022)

Geometrical product specifications (GPS) - Dimensional measuring equipment: Micrometers for external measurements - Design and metrological characteristics (ISO/DIS 3611:2022)

Geometrische Produktspezifikation (GPS) – Längenmessgeräte: Bügelmessschrauben – Konstruktionsmerkmale und messtechnische Merkmale (ISO/DIS 3611:2022)

Spécification géométrique des produits (GPS) - Équipement de mesurage dimensionnel: Micromètres d'extérieur - Caractéristiques de conception et caractéristiques métrologiques (ISO/DIS 3611:2022)

Ta slovenski standard je istoveten z: **prEN ISO 3611**

ICS:

17.040.30	Merila	Measuring instruments
17.040.40	Specifikacija geometrijskih veličin izdelka (GPS)	Geometrical Product Specification (GPS)

oSIST prEN ISO 3611:2022 **en,fr,de**

DRAFT INTERNATIONAL STANDARD

ISO/DIS 3611

ISO/TC **213**

Secretariat: **BSI**

Voting begins on:
2022-05-18

Voting terminates on:
2022-08-10

Geometrical product specifications (GPS) — Dimensional measuring equipment: Micrometers for external measurements — Design and metrological characteristics

Spécification géométrique des produits (GPS) — Équipement de mesurage dimensionnel: Micromètres d'extérieur — Caractéristiques de conception et caractéristiques métrologiques

ICS: 17.040.30

This document is circulated as received from the committee secretariat.

ISO/CEN PARALLEL PROCESSING

Reference number
ISO/DIS 3611:2022(E)

ISO copyright office
CP 401 • Ch. de Blandonnet 8
CH-1214 Vernier, Geneva
Phone: +41 22 749 01 11
Email: copyright@iso.org
Website: www.iso.org

Published in Switzerland

Contents

Page

Foreword

ISO (the International Organization for Standardization) is a worldwide federation of national standards bodies (ISO member bodies). The work of preparing International Standards is normally carried out through ISO technical committees. Each member body interested in a subject for which a technical committee has been established has the right to be represented on that committee. International organizations, governmental and non-governmental, in liaison with ISO, also take part in the work. ISO collaborates closely with the International Electrotechnical Commission (IEC) on all matters of electrotechnical standardization.

The procedures used to develop this document and those intended for its further maintenance are described in the ISO/IEC Directives, Part 1. In particular the different approval criteria needed for the different types of ISO documents should be noted. This document was drafted in accordance with the editorial rules of the ISO/IEC Directives, Part 2 (see www.iso.org/directives).

Attention is drawn to the possibility that some of the elements of this document may be the subject of patent rights. ISO shall not be held responsible for identifying any or all such patent rights. Details of any patent rights identified during the development of the document will be in the Introduction and/or on the ISO list of patent declarations received (see www.iso.org/patents).

Any trade name used in this document is information given for the convenience of users and does not constitute an endorsement.

For an explanation on the voluntary nature of standards, the meaning of ISO specific terms and expressions related to conformity assessment, as well as information about ISO's adherence to the World Trade Organization (WTO) principles in the Technical Barriers to Trade (TBT) see the following URL: www.iso.org/iso/foreword.html.

This document was prepared by Technical Committee ISO/TC 213, *Dimensional and geometrical product specifications and verification*.

This third edition cancels and replaces the second edition (ISO 3611:2010), which has been technically revised.

The main changes compared to the previous edition are as follows:

— general design characteristics have been removed and reference to ISO 14978:2018 included;

— metrological characteristics have been clarified and modified;

— requirements for test methods have been included;

— classification system of maximum permissible errors has been added.

Any feedback or questions on this document should be directed to the user's national standards body. A complete listing of these bodies can be found at www.iso.org/members.html.

Introduction

This document is a geometrical product specification (GPS) standard and is to be regarded as a general GPS standard (see ISO 14638). It influences the chain links for measuring equipment and calibration on size and distance in the general GPS matrix (see Annex C).

The ISO/GPS Masterplan given in ISO 14638 gives an overview of the ISO/GPS system of which this document is a part. The fundamental rules of ISO/GPS given in ISO 8015 apply to this document and the default decision rules given in ISO 14253-1 apply to specifications made in accordance with this document, unless otherwise indicated; see ISO/TR 14253-6 for additional information on the selection of alternative decision rules.

For more detailed information on the relation of this document to other standards and the GPS matrix model, see Annex C.

Geometrical product specifications (GPS) — Dimensional measuring equipment: Micrometers for external measurements — Design and metrological characteristics

1 Scope

This document provides the most important design and metrological characteristics of micrometers for external measurements:

— with analogue indication;

— with digital indication: mechanical or electronic digital display.

2 Normative references

The following documents are referred to in the text in such a way that some or all of their content constitutes requirements of this document. For dated references, only the edition cited applies. For undated references, the latest edition of the referenced document (including any amendments) applies.

ISO 14253-1, *Geometrical product specifications (GPS) — Inspection by measurement of workpieces and measuring equipment — Part 1: Decision rules for verifying conformity or nonconformity with specifications*

ISO 14253-5, *Geometrical product specifications (GPS) — Inspection by measurement of workpieces and measuring equipment — Part 5: Uncertainty in verification testing of indicating measuring instruments*

ISO/TR 14253-6, *Geometrical product specifications (GPS) — Inspection by measurement of workpieces and measuring equipment — Part 6: Generalized decision rules for the acceptance and rejection of instruments and workpieces*

ISO 14978:2018, *Geometrical product specifications (GPS) — General concepts and requirements for GPS measuring equipment*

ISO 3650, *Geometrical Product Specifications (GPS) — Length standards — Gauge blocks*

ISO/IEC Guide 98-3, *Uncertainty of measurement — Part 3: Guide to the expression of uncertainty in measurement (GUM:1995)*

ISO/IEC Guide 99:2007, *International vocabulary of metrology — Basic and general concepts and associated terms (VIM)*

3 Terms and definitions

For the purposes of this document, the terms and definitions given in ISO 14978:2018, ISO/IEC Guide 99:2007, and the following apply.

ISO and IEC maintain terminological databases for use in standardization at the following addresses:

— ISO Online browsing platform: available at https://www.iso.org/obp

— IEC Electropedia: available at https://www.electropedia.org/

3.1
micrometer for external measurements
measuring instrument which gives the evaluation of a dimensional quantity of an external feature of a workpiece on the basis of movement of a spindle with a measuring face, moving relatively to a material measure and an anvil, with the movement generated by a screw thread

Note 1 to entry: The guiding elements of the spindle and of the anvil are connected by a frame.

Note 2 to entry: Usually, micrometers for external measurements have a thread as a material measure with the anvil, spindle and material measure arranged in a line.

3.2
measuring face contact
contact between the measuring face and an integral feature of a workpiece

3.2.1
full measuring face contact
contact between the full area of the measuring face and an integral feature of a workpiece

3.2.2
partial measuring face contact
contact between a partial area of the measuring face and an integral feature of a workpiece

4 Design characteristics

4.1 General design and nomenclature

The design of a micrometer for external measurements shall follow the general guidelines in ISO 14978, including the common design characteristics in ISO 14978:2018, Annex C. See Figure 1 for an example of the general design.

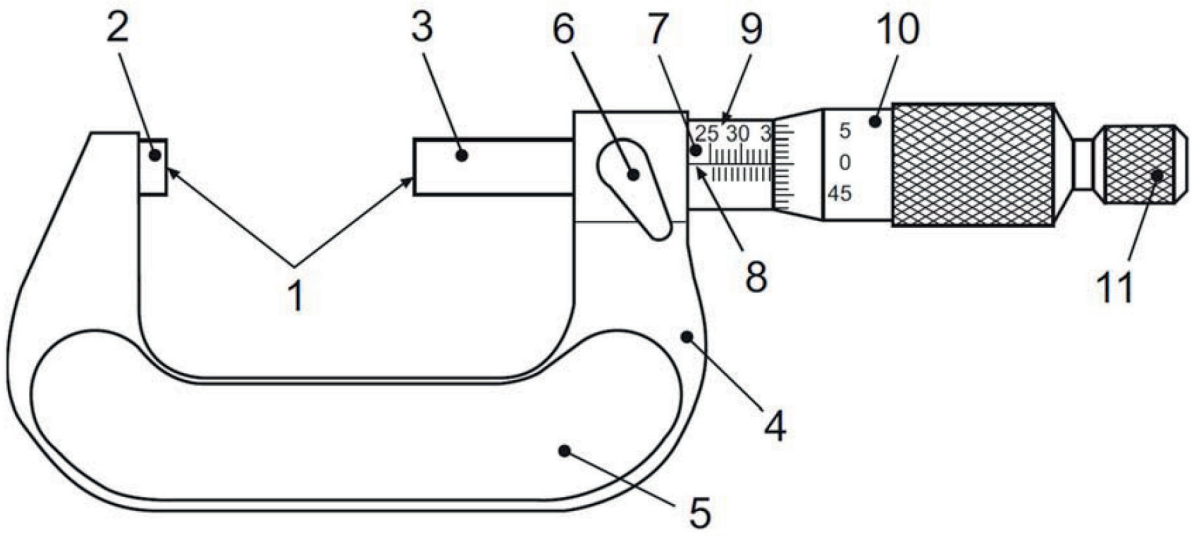

Key

1 measuring faces
2 anvil
3 measuring spindle
4 frame
5 thermally insulating plate
6 spindle clamp
7 sleeve
8 fiducial line
9 analogue indication
10 thimble
11 fast drive

Figure 1 — Nomenclature and general design of a micrometer for external measurements

4.2 Dimensions

The manufacturer shall state important dimensions, such as those shown in Figure 2 and Table 1. The values shown in Table 1 are typical dimensions and are not requirements of this document.

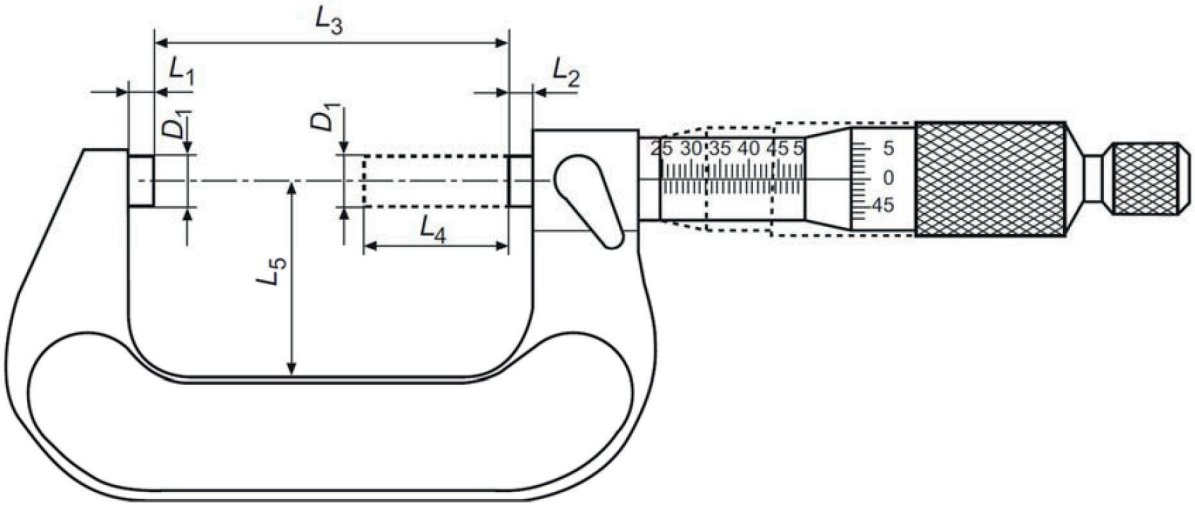

Figure 2 — Dimensions of a micrometer for external measurements