SLOVENSKI STANDARD
kSIST-TP FprCEN/TR 17614:2020

01-november-2020

Standardna metoda za ocenjevanje in izboljšanje energijske učinkovitosti čistilnih naprav za odpadno vodo

Standard method for assessing and improving the energy efficiency of waste water treatment plants

Standardmethode zur Bewertung und Verbesserung der Energieeffizienz von Kläranlagen

Méthode standard d'évaluation et d'amélioration de l'efficacité énergétique des stations d'épuration

Ta slovenski standard je istoveten z: FprCEN/TR 17614

ICS:

13.060.30	Odpadna voda	Sewage water
27.015	Energijska učinkovitost. Ohranjanje energije na splošno	Energy efficiency. Energy conservation in general

kSIST-TP FprCEN/TR 17614:2020 **en,fr,de**

TECHNICAL REPORT

RAPPORT TECHNIQUE

TECHNISCHER BERICHT

FINAL DRAFT
FprCEN/TR 17614

September 2020

ICS 13.060.30; 27.015

English Version

Standard method for assessing and improving the energy efficiency of waste water treatment plants

Méthode standard d'évaluation et d'amélioration de l'efficacité énergétique des stations d'épuration

Standardmethode zur Bewertung und Verbesserung der Energieeffizienz von Kläranlagen

This draft Technical Report is submitted to CEN members for Vote. It has been drawn up by the Technical Committee CEN/TC 165.

CEN members are the national standards bodies of Austria, Belgium, Bulgaria, Croatia, Cyprus, Czech Republic, Denmark, Estonia, Finland, France, Germany, Greece, Hungary, Iceland, Ireland, Italy, Latvia, Lithuania, Luxembourg, Malta, Netherlands, Norway, Poland, Portugal, Republic of North Macedonia, Romania, Serbia, Slovakia, Slovenia, Spain, Sweden, Switzerland, Turkey and United Kingdom.

Recipients of this draft are invited to submit, with their comments, notification of any relevant patent rights of which they are aware and to provide supporting documentation.

Warning : This document is not a Technical Report. It is distributed for review and comments. It is subject to change without notice and shall not be referred to as a Technical Report.

EUROPEAN COMMITTEE FOR STANDARDIZATION
COMITÉ EUROPÉEN DE NORMALISATION
EUROPÄISCHES KOMITEE FÜR NORMUNG

CEN-CENELEC Management Centre: Rue de la Science 23, B-1040 Brussels

Ref. No. FprCEN/TR 17614:2020 E

Contents

Page

European foreword ... 3

Introduction ... 4

1 Scope ... 5

2 General considerations of methodologies ... 5

3 Methodology for Rapid Audit (RA) ... 6
3.1 Identification of the WWTP typology ... 6
3.2 Energy consumption data collection ... 7
3.2.1 Energy consumption data ... 7
3.2.2 Energy producing WWTPs and sludge imports ... 8
3.2.3 Chemical energy consumption ... 8
3.2.4 Total energy consumption estimation ... 10
3.3 Identification of the WWTP boundaries and calculation of Key Performance Indicators (KPIs) ... 10
3.4 Calculation of the Water Treatment Energy INDEX (WTEI) as a single indicator ... 13

4 Methodology for Decision Support (DS) ... 16
4.1 Identification of the WWTP typology ... 16
4.2 WWTP boundaries ... 17
4.3 Request required approvals and keep communication (operators, site managers, process engineers, budget holders and other possible end users) and health safety considerations ... 20
4.4 Create database describing all equipment on site ... 20
4.5 Select equipment for online monitoring and install online monitors according to manual ... 22
4.6 Energy consumption data collection ... 22
4.6.1 Energy consumption data ... 22
4.6.2 Chemical energy consumption ... 23
4.6.3 Energy producing WWTPs and sludge imports ... 24
4.6.4 Gross and net energy consumption at stage estimation ... 25
4.7 Key Performance Indicators (KPIs) ... 25
4.8 Monitor site for KPIs (how often to monitor, methods used for monitoring) ... 37
4.9 Water Treatment Energy Index (WTEI) as a composite indicator ... 37

Annex A (informative) Rapid Audit methodology applied to a case study ... 41

A.1 Introduction ... 41

A.2 Case Study Structure ... 41

Annex B (informative) Decision Support methodology applied to a case study ... 45

B.1 Introduction ... 45

B.2 Case Studies Structure ... 45

Annex C (informative) Overview of training of auditors ... 55

C.1 Training of people on the online tool and audits ... 55

C.2 Audit, data collection and validation ... 56

Bibliography ... 59

European foreword

This document (FprCEN/TR 17614:2020) has been prepared by Technical Committee CEN/TC 165 "Waste water engineering", the secretariat of which is held by DIN.

This document is currently submitted to the Vote on TR.

Introduction

Wastewater Treatment Plants (WWTPs) are one of the most expensive public industries in terms of energy requirements, accounting for more than 1 % of consumption of electricity in Europe. Thus, there is a need to stop the current unsustainable energy consumption of the sector in line with the objectives of Europe 2020 and the EU Sustainable Development Strategy (SDS).

The energy consumption must be related with the performance of a WWTP and parameters such as effluent flow, nutrient removal, biochemical oxygen demand (BOD), chemical oxygen demand (COD), suspended solids, orthophosphate (PO_4), ammonia (NH_4) and nitrate (NO_3) need to be estimated or determined at various stages of the WWTP for an effective estimation and assessment of energy efficiency in WWTP.

This Technical Report presents a methodology to guide water experts and auditors on how to evaluate the energy performance of a WWTP reaching a final energy diagnosis and the calculation of a *Water Treatment Energy Index (*WTEI).

The methodology intends to be a very simple and easy to follow document that can be effortlessly understood and put in practice by operators, site managers, process engineers as well as energy auditors. It includes: planning the estimation of energy consumption at a WWTP; requesting approvals and keeping communication (operators, site managers, process engineers, budget holders and other possible end users) and health safety considerations; compilation of a database describing all equipment on site; selection of equipment for online monitoring and install online monitors according to manual; monitoring site for KPIs; training of people on the online tool and audits; audit, data collection and validation; calculation of the WTEI and classification of WWTPs. Furthermore the application of the methodology was completed to 3 case studies as practical examples.

The methodology included in this Technical Report considers two approaches for the determination of energy consumption in WWTPs, namely *Rapid Audit* and *Decision Support*.

Rapid Audit is aimed at a rapid estimation of the WTEI of a particular WWTP using existing information. This method uses existing information including historical data on energy consumption as well as the wastewater influent and effluent. A trained auditor can calculate the WTEI and the obtained values can be compared against a large database.

Decision Support is aimed at establishing the WTEI of a particular WWTP and providing information that can be used as decision support of an energy efficiency diagnosis. It requires online energy data obtained over extended periods of time as well as intensive wastewater sampling campaigns to establish KPIs for each individual treatment stage. The combined information from the online meters and wastewater sampling can then be used to calculate the WTEI using carefully selected statistical tools and energy performance indicators. The methodology described includes guidelines on how to select equipment/processes to place energy monitors, how to monitor the WWTP and how data should be processed and reported. The *Decision Support* methodology can be used to provide an WWTP energy benchmark but also understand impact of seasonal variations, storm events, changes in maintenance routines, implementation of new equipment (e.g.: screens, pumps, blowers, etc.) as well as retrofitting of existing processes as well as implementation of new processes. This methodology can also be used as a tool to identify energy efficiencies and inefficiencies so further actions can be planed and the impact can be measured and verified online. The *Decision Support* methodology can also be used as training tool as well as help water utilities to clearly communicate to operators, engineers and the general public how changes in operation and behaviour that can lead to energy efficiency and reduce energy consumption.

This Technical Report is based on the outcomes of the ENERWATER project, a coordination and support action funded by European Commission under Programme H2020 (www.enerwater.eu).

1 Scope

This document defines a methodology for determining and assessing the energy efficiency of Waste Water Treatment Plants (WWTP). The methodology aims at describing, in a systematic way, the various steps required to establish the *Water Treatment Energy Index* (WTEI) of a particular WWTP.

The methodology includes the classification of WWTPs in different types, identification of different stages of treatment, identification of key performance indicators (KPIs), overview of existing energy monitoring standards and the detailed description of the methodology, including a step by step guideline of how to apply and implement it.

The methodology is divided in 2 sub-methods that should be selected and followed according to the following goals:

— The *Rapid Audit* (*RA*) method allows for a quick estimation of the water treatment energy index (WTEI) based on existing information such as historical data pertaining to energy use records along with influent and effluent quality values. The aim of this methodology is to provide a WWTP energy benchmark, a rapid tool to identify energy efficiencies and inefficiencies so further actions can be planned, as well as to evaluate the impact of WWTP retrofitting.

  The *Rapid Audit* methodology is detailed step by step in Clause 3 of this TR and can be used as a standalone document.

— The *Decision Support* (*DS*) method requires intensive monitoring across a WWTP of energy usage and water quality parameters that provides an accurate and detailed calculation of WTEI for each stage as well as its overall value for the plant. The goal of this assessment is to serve as a diagnosis of the functions/equipment in a plant that may lead to poor energy efficiency performance.

  The *Decision Support* methodology is detailed step by step in Clause 4 of this TR and can be used as a standalone document.

2 General considerations of methodologies

Both Rapid Audit (RA) and Decision Support (DS) methodologies are structured in a similar way but with a different level of detail. To sum up the procedures, first the type of WWTP according to its functions is established; then energy consumption and other measurements (flowrate, pollutant concentrations, etc.) are combined to form relevant key performance indicators (KPIs). Guidelines for the estimation of analytical results, in case actual measurements are not available, are also given. Finally, the KPIs are normalized and combined according suitable weights in order to obtain the *Water Treatment Energy Index* (WTEI).

In facilities where (at least part of) the energy is produced on site, e.g. electricity from anaerobic digestion of sludge, two different values of WWTP total energy consumption may be identified and have been labelled here as Gross and Net energy consumption:

— A plant's **gross energy consumption** is defined as the total amount of energy that is consumed by the plant regardless of its source.

— A plant's **net energy consumption** is defined as the amount of energy that is consumed by the plant excluded the amount of renewable energy created on the site.[1)]

[1)] A similar concept was approved and implemented by the European Union and other agreeing countries for the residential sector, i.e. the net-zero energy building (NZEB): https://ec.europa.eu/energy/en/topics/energy-efficiency/buildings/nearly-zero-energy-buildings .

3 Methodology for Rapid Audit (RA)

This methodology is aimed at a establishing the *Water Treatment Energy Index* (WTEI) of a particular WWTP, using existing information on site including historical data on energy consumption, as well as influent and effluent quality to calculate the key performance indicators (KPIs).

3.1 Identification of the WWTP typology

Wastewater treatment plants can have various functions depending on the type of pollutants removed. For instance, removal of solids and dissolved organic matter might be targeted whilst other WWTP might target a wider range of pollutants, i.e. from solids all the way to pathogens and persistent pollutants present in micrograms per litre. The need to remove different types of pollutants is linked with the regulatory framework in Europe and the type/water quality of the receiving water body. There are some key European Directives linked wastewater effluent discharges into waterways:

— Urban Waste Water Treatment Directive (UWWTD) (91/271/EEC);

— Nitrates Directive (ND) (91/676/EEC);

— Water Framework Directive (WFD) (2000/60/EC);

— Bathing Water Treatment Directive (2006/7/EC) replacing (76/160/EEC);

— Shellfish Directive (79/923/EEC);

— Freshwater Fish Directive (78/659/EEC).

These European Directives aim to protect the receiving waterways depending on its chemical quality, ecological status, potential for eutrophication or other activities such as bathing, fishing or shellfish production etc. Sensitive areas are designated after surveys establishing that the receiving water body is adversely impacted by WTTPs that discharge effluents just treated for solids (TSS) and dissolved organic matter (BOD and COD) (usually designed as secondary treatment). Designated as sensitive areas are:

(i) eutrophic or could become so in the near future without tertiary protection;

(ii) abstraction sources that have or could have high nitrate levels without tertiary protection;

(iii) other directives' water in need of or already receiving tertiary protection.

Overall, sensitive areas are in need of protection through the provision of tertiary treatment at the WWTPs whose discharges adversely impact the waters. There are various types of sensitive areas and their type will influence the form of tertiary treatment provided: for example bathing and shellfish water sensitive areas will be protected by UV treatment, and waters adversely affected by nutrients in discharges will receive phosphorus and/or nitrogen reduction.

This complexity of the WWTPs needs to be addressed in the methodology. Following of the work completed by others on the life cycle analysis of WWTPs the following typologies are recommended:

Type 1: Discharge to non-sensitive - this includes WWTPs focused on the removal TSS, BOD, COD and NH_4.

Type 2: Discharge to sensitive areas - this includes WWTPs focused on removing TSS, BOD, COD, NH_4, NO_3, total phosphorus (TP).

Type 3: Discharge for re-use (pathogens) - this includes WWTPs focused on removing TSS, BOD, COD, NH_4, NO_3, TP and pathogens removal (e.g. coliforms log reduction).

3.2 Energy consumption data collection

3.2.1 Energy consumption data

Historical data on the energy consumed at the WWTP needs to be available, including electricity and other fuels such as diesel, natural gas etc. Electricity consumption on the WWTPs can be obtained by consulting electricity bills, meter readings or existing online meters. This information needs to be collected to provide an estimation of kWh used at the entire WWTP per unit of time (i.e.: the recommended period of time is 3 years of data to account for seasonal variability). If other fuels are used, for example to drive generators to produce electricity, the fuel consumption (i.e.: in litres or tons), these also need to be quantified and converted to kWh per unit of time using the conversion factors in Table 2 to calculate the total energy consumption (Formula (1)).

Table 1 — Energy carrier classification, conversion factor and equations to estimate specific power consumption

Energy carrier	Conversion factors	Abbr.	Equations to estimate specific power consumption
Electric energy in kWh	$1\left(\frac{kWh}{kWh}\right)$	V1	Ep_V1 = P × T × U.F
Diesel in kg	$11,87\left(\frac{kWh}{kg}\right)$	V2	Ep_V2 = equipment usage/year x usage time (h) × 11,87 × diesel used [kg/h] × β_g where, β_g is efficiency of electrical generator (0,35)
Natural gas in Ncm (normal cubic meters) *Normal conditions (0 °C, atmospheric pressure)*	$9,94\left(\frac{kWh}{Ncm}\right)$	V3	Case I) Ep_V3 = Natural gas used in combined heat and power engine kWh_el = (Ncm/y) × 9,94 × β_el kWh_th = (Ncm/y) × 9,94 × (1- β_el)) × β_th† Case II) Ep_V3 = Natural gas used in a trigeneration system to provide power, heating and cooling kWh_el = (Ncm/y) × 9,94 × β_el kWh_th = (Ncm/y) × 9,94 × (1- β_el)) × β_th† kWh_c = (Ncm/y) × 9,94 × (1- β_el)) × β_th† × β_c‡ Case III) Ep_V3 = Natural gas used for heating only kWh_th = Scm/y × 9,94 × β_th†
Biogas in Ncm (normal cubic meters) *Normal conditions (0 °C, atmospheric pressure)*	$9,94 \times NGC\left(\frac{kWh}{Ncm}\right)$ where NGC is the natural gas content in the biogas (vol/vol)	V4	Case I) Ep_V4 = Biogas used in combined heat and power engine kWh_el = Scm/y × 9,94 *NGC* × β_el * kWh_th = Scm/y × 9,94 *NGC* × (1- β_el)) × β_th† Case II) Ep_V4 = Biogas used in a trigeneration system to provide power, heating and cooling kWh_el = (Ncm/y) × 9,94 *NGC* × β_el * kWh_th = (Ncm/y) × 9,94 *NGC* × (1- β_el)) × β_th† kWh_c = (Ncm/y) × 9,94 *NGC* × (1- β_el)) × β_th† × β_c‡ Case III) Ep_V4 = Biogas used for heating only

Energy carrier	Conversion factors	Abbr.	Equations to estimate specific power consumption
			kWh_th = Scm/y × 9,94 *NGC* × β_th†

* typical efficiency taken as 0,40 for electricity generation

† typical efficiency taken as 0,85 for heat production and recovery

‡ typical efficiency taken as 0,70 for an adsorber

NOTE All conversion factors have been taken from UNI/TS 11300-2:2014.

$$E1: \ Energy\ consumed\ at\ WWTP\ = \ electric\ energy\ according\ to\ historical\ data\ (kWh\ /\ year) + Ep\_V1\ +\ Ep\_V2\ +\ Ep\_V3\ +\ Ep\_V4 \quad (1)$$

3.2.2 Energy producing WWTPs and sludge imports

WWTPs can have a range of technologies that produce energy/electricity on site. Technologies such as anaerobic digestion (of sludge, imported sludge, other wastes, etc.), hydraulic-power, wind turbines, solar panels, fuel-cells, etc., are currently used. The generation of electricity on the WWTP can offset the energy requirements to produce a high effluent quality. The energy produced on site that is used on site can be estimated taking in consideration Formula (2). The recommended period of time is 3 years of data to account for seasonal variability.

$$E2: \ Energy\ \ produced\ at\ WWTP\ = \sum_{i=A}^{L} i \quad (2)$$

Where, *A* to *L* are the types of energy produced in the WWTP: *A* – energy from biogas (kWh/year); *B* - hydraulic-power (kWh/year); *C* – wind turbines (kWh/year); *D* – solar panels (kWh/year); *E* - fuel-cells (kWh/year); *F-L* – other (kWh/year).

Many WWTPs with anaerobic digesters act as sludge treatment centres receiving sludge from nearby sites. The imported sludge is often mixed with the sludge produced at the WWTP for further treatment such as dewatering, anaerobic digestion etc. potentially accounting for both energy consumption and production on the WWTP. Sludge imports can be very significant in some WWTPs (up to twofold the sludge produced on site). As such, the volume of sludge imports, respective total suspended solids as well as an estimation of the energy consumed and produced for its treatment needs to be taken into consideration (Formula (3)).

$$E3: Energy\ produced\ and\ consumed\ by\ sludge\ imports\ = Energy\ produced\ by\ sludge\ imports\ (kWh\ /\ year)\ -\ Energy\ consumed\ by\ sludge\ imports\ (kWh\ /\ year) \quad (3)$$

3.2.3 Chemical energy consumption

Some WWTPs also use chemicals, as well as energy to drive wastewater treatment and produce clean effluents. Chemicals such as iron sulphate or iron chloride can be added to the wastewater to remove pollutants such as phosphorus. Other chemicals that are frequently used in WWTPs include alum, poly-electrolyte, acetate, methanol and carbonates, lime etc. Hence, the use of chemicals and respective amounts can impact on the pollutants removal efficiency of WWTPs and replace, to a certain extent, the use of other sources of energy. In order to account for the use of chemicals on the methodology, the embedded energy in chemicals should also be estimated. This can be done using the Cumulative Energy

Demand (CED) method developed by Frischknecht et al. (2007)[2]. CED is a widely used indicator for environmental impacts[3]. It investigates the direct and indirect consumption of energy necessary to obtain a product or service. The CED is used to indicate the equivalent of primary energy consumption in the chain of a product or the energy consumed in a certain system over its entire lifecycle, from the extraction of raw materials to the end of life of the product or system. Examples of CED conversion factors are reported in Table 2, while Formula (4) represents the formula used for estimating the embedded energy of chemical for common products used for wastewater treatment and accounted for when calculating the WTEI.

In order to account for the use of chemicals on the methodology, the chemical "energy for production" should also be estimated using the conversion factors (Table 2 and Formula (4)) and accounted for when calculating the WTEI. The chemical "energy for production" refers the amount of energy required to produce a certain chemical. These values are relatively stable and are currently reported through compulsory life cycle assessments.

$$E4: Chemical\ energy\ consumption = \sum_{i=A}^{L} cec_i \cdot M_i \tag{4}$$

where

A to L are the chemicals used in the WWTP;

M_i is the mass (in kg) consumed of each chemical; and

cec_i is the specific chemical energy consumption (in kWh/kg) all chemicals used in the WWTP from A to L.

Hence, the chemical energy consumption is calculated by multiplying the kg chemical used as pure product per unit of time (over the past 3 years) by the specific chemical energy of production in Table 2.

Table 2 — Chemical energy of chemicals commonly used in WWTPs as commercial products

Chemical	Specific chemical energy (kWh/kg)
Acetic acid 80 % sol.	10,3
Aluminium sulphate 50 % sol.	1,04
Iron(III) chloride 40 % sol.	3,40
Iron(III) sulphate 12,5 % sol.	1,90
Iron(II) sulphate 100 %	0,90
Methanol 100 %	9,21
NaOH 50 % sol.	4,17
Peracetic acid 15 % sol.	6,90
Polyaluminium chloride (PAC) 25 % sol.	1,94
Polyelectrolyte (polymer 5 %)	1,40

[2] Frischknecht, R., et al. (2007) Implementation of Life Cycle Impact Assessment Methods: Data v2.0. ecoinvent report No. 3, Swiss centre for Life Cycle Inventories, Dübendorf, Switzerland.

[3] Remy C,et al (2014). Proof of concept for a new energy-positive wastewater treatment scheme. *Water Science and Technology*; 70(10):1709-1716.

3.2.4 Total energy consumption estimation

The gross and net energy consumed at a WWTP can be estimated by combining the results from Formulae (1) to (4) as well as sludge imports (Formula (5) and (6), respectively).

Gross energy consumption (kWh/year) = E1 (energy consumed at WWTP) + E2 (chemical energy consumption) (kWh/year) – E3 (energy produced and consumed by sludge imports) (5)

Net energy consumption (kWh/year) = E1 (energy consumed at WWTP) + E2 (chemical energy consumption) (kWh/year)– [E3 (energy produced at WWTP) – E4 (energy produced and consumed by sludge imports)] (6)

3.3 Identification of the WWTP boundaries and calculation of Key Performance Indicators (KPIs)

WWTPs can be composed of a very wide variety of processes designed for removal pollutants from used water that has been discharged to a central facility. For the purpose of the methodology for Rapid Audit, only the influent and effluent characterization and respective removals should be considered; the WWTP is taken as a black box (Figure 1).

Various methodologies have been described to estimate energy consumption in WWTPs including: utilization of the equipment specifications (power and usage time), power loggers and modelling. In Europe, the methodologies adopted vary from country to country and even amongst water utilities. The limitations of exiting methodologies are related with the need to compare similar wastewater pollutant loads at the influent, including carbon to nitrogen ratios, and effluent consents (discharge limits), that might vary between geographical regions and therefore can be of limited energy consumption data when comparing sites in different locations. Another important aspect to take into consideration is how the energy consumption is reported[4]. Some examples include energy consumption per volume of wastewater treated, connected people (population equivalent), pollutant load or per type of treatment process giving origin to a wide range of units on how to report the energy data (e.g.: kWh/PE; kWh/m^3; kWh/PE.year; kWh/kgCOD_{rem}; €/m^3; kWh/kgN_{rem}; kWh/kgBOD_{rem}; kWh/m^3_{biogas}).

[4]) Longo et al. Monitoring and diagnosis of energy consumption in wastewater treatment plants. A state of the art and proposals for improvement. *Applied Energy*. (2016), 179, 1251-1268. Available at https://goo.gl/KRWTwH and http://hdl.handle.net/10347/15033

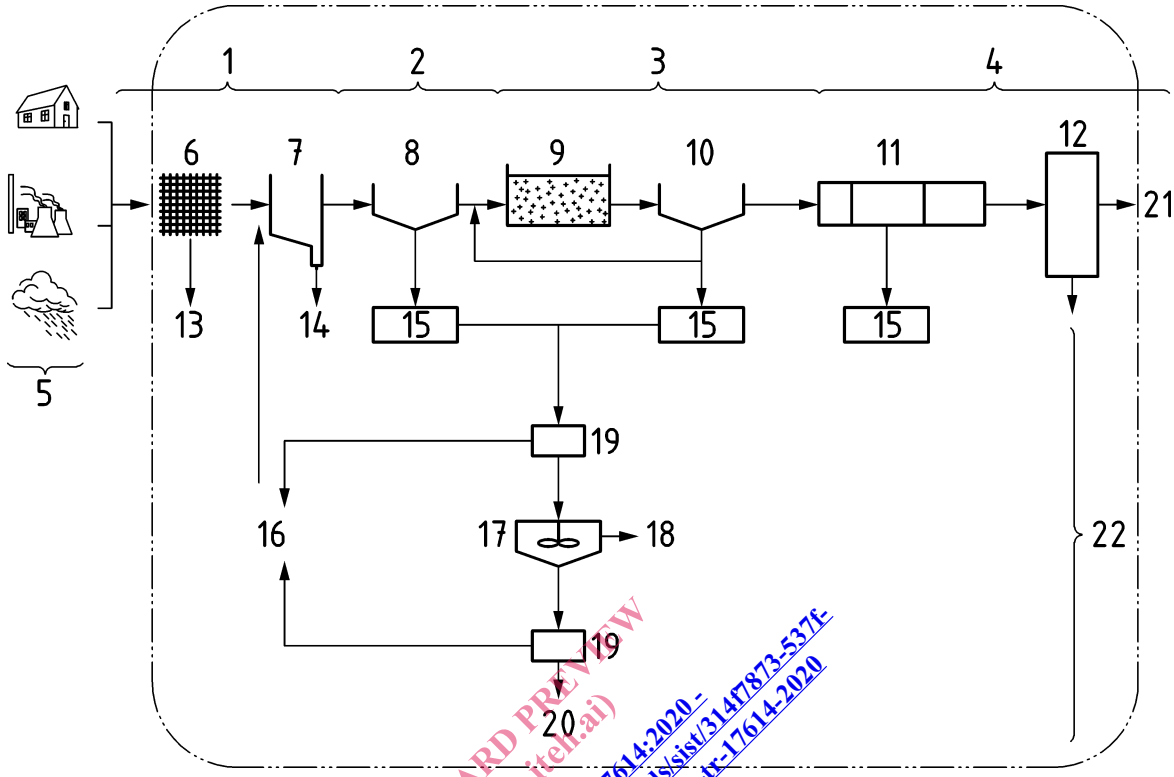

Key

1	pre-treatment
2	primary treatment
3	secondary treatment
4	tertiary treatment
5	influent
6	screens
7	grit chamber
8	primary sed
9	biological treatment
10	secondary sed
11	tertiary treatment
12	advanced treatment
13	large items
14	grit
15	sludge
16	return liquors
17	sludge stabilization
18	energy (biogas, etc.)
19	sludge processing (thickening, dewatering)
20	sludge disposal or reuse
21	treated effluent
22	sludge treatment

Figure 1 — General schematic representation of a WWTP, with various stages