# SLOVENSKI STANDARD
# oSIST prEN ISO 22282-4:2020

**01-julij-2020**

---

**Geotehnično preiskovanje in preskušanje - Hidrogeološke preiskave - 4. del: Črpalni preskus (ISO/DIS 22282-4:2020)**

Geotechnical investigation and testing - Geohydraulic testing - Part 4: Pumping tests (ISO/DIS 22282-4:2020)

Geotechnische Erkundung und Untersuchung - Geohydraulische Versuche - Teil 4: Pumpversuche (ISO/DIS 22282-4:2020)

Reconnaissance et essais géotechniques - Essais géohydrauliques - Partie 4: Essais de pompage (ISO/DIS 22282-4:2020)



**Ta slovenski standard je istoveten z: prEN ISO 22282-4**

---

**ICS:**

| | | |
|---|---|---|
| 93.020 | Zemeljska dela. Izkopavanja. Gradnja temeljev. Dela pod zemljo | Earthworks. Excavations. Foundation construction. Underground works |

**oSIST prEN ISO 22282-4:2020 en**

DRAFT INTERNATIONAL STANDARD

**ISO/DIS 22282-4**

ISO/TC **182**

Secretariat: **BSI**

Voting begins on:
**2020-04-21**

Voting terminates on:
**2020-07-14**

# Geotechnical investigation and testing — Geohydraulic testing —

## Part 4:
## Pumping tests

*Reconnaissance et essais géotechniques — Essais géohydrauliques —*

*Partie 4: Essais de pompage*

ICS: 93.020





This document is circulated as received from the committee secretariat.

**ISO/CEN PARALLEL PROCESSING**

Reference number
ISO/DIS 22282-4:2020(E)

ISO copyright office
CP 401 • Ch. de Blandonnet 8
CH-1214 Vernier, Geneva
Phone: +41 22 749 01 11
Fax: +41 22 749 09 47
Email: copyright@iso.org
Website: www.iso.org

Published in Switzerland

# Contents

Page

# Foreword

ISO (the International Organization for Standardization) is a worldwide federation of national standards bodies (ISO member bodies). The work of preparing International Standards is normally carried out through ISO technical committees. Each member body interested in a subject for which a technical committee has been established has the right to be represented on that committee. International organizations, governmental and non-governmental, in liaison with ISO, also take part in the work. ISO collaborates closely with the International Electrotechnical Commission (IEC) on all matters of electrotechnical standardization.

International Standards are drafted in accordance with the rules given in the ISO/IEC Directives, Part 2.

The main task of technical committees is to prepare International Standards. Draft International Standards adopted by the technical committees are circulated to the member bodies for voting. Publication as an International Standard requires approval by at least 75 % of the member bodies casting a vote.

Attention is drawn to the possibility that some of the elements of this document may be the subject of patent rights. ISO shall not be held responsible for identifying any or all such patent rights.

ISO 22282-4 was prepared by the European Committee for Standardization (CEN) Technical Committee CEN/TC 341, *Geotechnical investigation and testing*, in collaboration with Technical Committee ISO/TC 182, *Geotechnics*, Subcommittee SC 1, *Geotechnical investigation and testing*, in accordance with the Agreement on technical cooperation between ISO and CEN (Vienna Agreement).



ISO 22282 consists of the following parts, under the general title *Geotechnical investigation and testing — Geohydraulic testing*:



— *Part 1: General rules*

— *Part 2: Water permeability tests in a borehole using open systems*

— *Part 3: Water pressure tests in rock*

— *Part 4: Pumping tests*

— *Part 5: Infiltrometer tests*

— *Part 6: Water permeability tests in a borehole using closed systems*

 

# Geotechnical investigation and testing — Geohydraulic testing —

## Part 4:
## Pumping tests

## 1 Scope

This part of ISO 22282 establishes requirements for pumping tests as part of geotechnical investigation service in accordance with EN 1997-1 and EN 1997-2.

General rules on the planning and execution of geohydraulic field tests are covered by ISO 22282-1.

A pumping test consists in principle of:

— drawing down the piezometric surface of the groundwater by pumping from a well (the test well);

— measuring the pumped discharge and the water level in the test well and piezometers, before, during and after pumping, as a function of time.



This part of ISO 22282 applies to pumping tests performed on aquifers whose permeability is such that pumping from a well can create a lowering of the piezometric head within hours or days depending on the ground conditions and the purpose. It covers pumping tests carried out in soils and rock.

The tests concerned by this part of ISO 22282 are those intended for evaluating the hydrodynamic parameters of an aquifer and well parameters, such as:



— permeability of the aquifer,

— radius of influence of pumping,

— pumping rate of a well,

— response of drawdown in an aquifer during pumping,

— skin effect,

— well storage,

— response of recovery in an aquifer after pumping.

## 2 Normative references

The following referenced documents are indispensable for the application of this document. For dated references, only the edition cited applies. For undated references, the latest edition of the referenced document (including any amendments) applies

ISO 14688-1, *Geotechnical investigation and testing — Identification and classification of soil — Part 1: Identification and description*

ISO 14689-1, *Geotechnical investigation and testing — Identification and classification of rock — Part 1: Identification and description*

ISO 22282-1, *Geotechnical investigation and testing — Geohydraulic testing — Part 1: General rules*

 

ISO 18674-4, *Geotechnical investigation and testing — Geotechnical monitoring by field instruments — Part 4: Piezometers*

# 3 Terms, definitions and symbols

## 3.1 Terms and definitions

For the purposes of this document, the terms and definitions given in ISO 22282-1 and the following apply.

**3.1.1**
**radius of influence of pumping**
$R(t)$
distance, measured from the axis of the well, beyond which the lowering of the piezometric surface of the groundwater is nil

Note 1 to entry: In a steady-state condition, $R(t)$ is constant, and is thus designated by $R_a$.

## 3.2 Symbols

| Symbol | Designation | Unit |
|---|---|---|
| $D$ | drilled diameter of the well | m |
| $d$ | thickness of the aquifer | m |
| $L$ | wetted length of screen of the perforated pipe placed in the well | m |
| $Q$ | flow rate | $m^3/s$ |
| $Q_d$ | discharge rate, assessed pumping discharge at the end of the well preparation | $m^3/s$ |
| $Q_e$ | discharge of the pumping test | $m^3/s$ |
| $R_a$ | radius of influence under steady-state conditions | m |
| $R(t)$ | radius of influence at time $(t)$ | m |
| $S$ | storage factor | — |
| $T$ | transmissivity | $m^2/s$ |
| $t$ | time | s |
| $v$ | velocity | — |
| $a$ | slope of the line that characterizes the drawdown in the well | — |
| $b$ | ordinate at the origin of the line that characterizes the drawdown in the well | — |
| $c$ | conventional drawdown unit of the preliminary pump discharge | — |
| $d_N$ | size which may be interpolated from the grading curve, of the square sieve mesh of side $d$ for which the weight percent of undersize is equal to N percent | — |
| $e$ | distance between the bottom of the well and the surface of the unconfined groundwater at rest in an aquifer | m |
| $k_h$ | horizontal permeability coefficient | m/s |
| $\Delta h$ | drawdown of the water level in the well | m |
| $\Delta h'$ | drawdown of the water level in the well after 2 h | m |
| $\Delta h_f$ | drawdown of the water level in the well, set during the preliminary test and not to be exceeded | m |
| $\Delta h_{max}$ | maximum drawdown of the water level in the well during the pumping test | m |



# 4 Equipment

Conducting a pumping test requires the following equipment and instruments:

a) a test well and piezometers (see ISO 18674-4);

 

b) a pump and associated pipework capable of pumping from the test well. The pumps shall be equipped with a suitably long discharge pipe so that the water from the pump is discharged sufficiently far away so that it does not affect the test area. The capacity of the pump shall be sufficient to extract from the well a discharge at least equal to that corresponding to that estimated to achieve the maximum planned drawdown;

NOTE Pumping tests are commonly carried out using electric submersible pumps, installed within the test well. However, depending on conditions, pumping tests can also be carried out using suction pumps located at the surface, airlift equipment, or special dewatering equipment such as well points or eductors.

c) a system for regulating and measuring the discharge ($m^3/s$). Devices for measuring the discharge rate shall be suitably calibrated and shall be accurate for a range of flow rates anticipated during the test;

d) a system for measuring the water level in the test well and piezometers. The turbulence in the test well caused by pumping shall be considered; the devices shall be capable of measuring water levels over the range of drawdowns anticipated during the test;

e) a time measuring and/or recording device, reading in seconds.

# 5 Test procedure

## 5.1 Test preparation

### 5.1.1 General



When preparing a pumping test, there are a number of things to investigate and consider in advance, such as:

— basic information on the ground and groundwater conditions according to ISO 22282-1;



— the required drawdown and/or the required discharge rate during the test;

— the discharge point for the pumped water and its location relative to the test well;

— the duration of the test.

### 5.1.2 Determining the discharge rate for the pumping test

The discharge rate $Q_d$ must be estimated to ensure that the test well can yield sufficient water, to allow a pump of appropriate capacity to be selected, and to ensure that the discharge can be accepted at the agreed disposal point.

The discharge rate can be estimated by one or more of the following methods:

— based on the purpose of the test and experience of local conditions;

— by theoretical assessment of the well capacity, according to the method described in Annex B;

— by analysis of information from the preliminary pumping phase, according to the method described in Annex B.

## 5.2 Arranging the disposal of discharge water

The disposal of discharge water shall be in accordance with relevant rules and regulations.

If the discharge water is not disposed of via an engineered sewer network, it shall be disposed of at sufficient distance from the test well that it will not have a significant impact on the observed pattern of groundwater lowering.

 

## 5.3 Executing and equipping the well

### 5.3.1 Design of the test well

The test well shall be designed to satisfy the following criteria (see Figure 1):

— of sufficient depth to penetrate below the groundwater level in the strata of interest. If the test well does not fully penetrate the aquifer, it shall penetrate the saturated part of the aquifer to a depth of at least 25 times the well screen diameter with a minimum of 3 m;

— of sufficient drilled diameter to accommodate the necessary filter materials and well screen of sufficient diameter to accommodate pumping equipment of adequate capacity to achieve the required discharge rate;

— with sufficient length and capacity of well screen to ensure that the required discharge rate can be achieved;

— to have appropriate filter material to ensure that the discharge water contains an acceptably low sediment content to avoid the risk of pump damage and ground settlement as a result of the removal of fine particles from the soil. Where the well is constructed in a stable rock, it may be possible to construct a test well without the need for filter material.

The filter material shall be a highly permeable granular material of closely controlled particle size, and be formed of grains of inert minerals in relation to the aquifer groundwater chemistry (e.g. quartz, feldspar). In granular soils, the filter's grading curve shall satisfy the double inequality:

$$5\, d_{15\ \mathrm{soil}} \leq d_{15\ \mathrm{filter}} \leq 5\, d_{85\ \mathrm{soil}}$$



where $d_N$ designates the characteristic size of the filter or of the ground in place, such that the mass of the soil fraction passing through a sieve with a square mesh of side d represents N % of the total mass of material.



In fine grained soils or where the well screen is equipped with a geotextile mesh designed to act as a filter, the filter material's purpose is to backfill the annular space between the outside of the well screen and the borehole wall. In those circumstances the filter media should be highly permeable coarse sand or fine gravel, with a permeability coefficient at least 100 times that of the soil or rock being tested.

The thickness of the annular space for the filter pack shall be at least 50 mm. The inner diameter of the test well shall be selected according to the purpose.

 

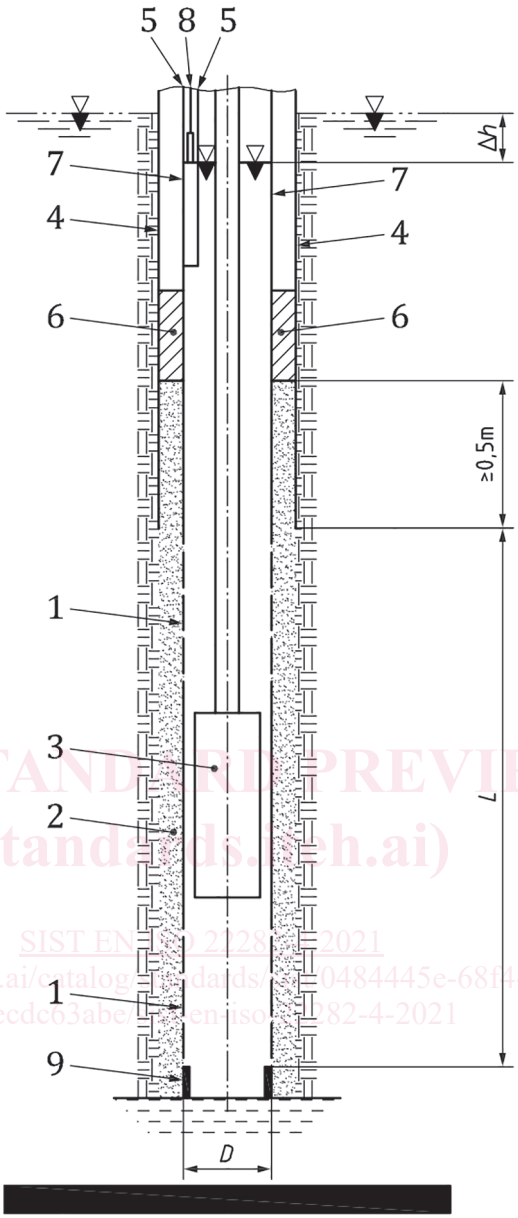




**Key**

1 well screen (slotted tube)
2 filter material (filter pack)
3 submersible pump
4 borehole casing
5 tube for measuring the water level
6 sealing plug
7 plain tube
8 device for measuring the water level
9 base of the screen
L filter length
D drilled diameter of the well

**Figure 1 — Test well equipped for a pumping test — Example**

### 5.3.2 Installation procedure

The test well shall be constructed in a similar way to piezometers in accordance with ISO 22475-1. Great care shall be taken when installing the well materials. Particular attention shall be paid to the following:

— The well screen shall be lowered into the borehole to the specified level and shall be installed centrally in the well, with the top and bottom of the screen located at the design level. Care shall be taken that the joints of the screen and casing do not leak, and that the screen and casing are installed vertically and straight.

— If necessary, filter material shall be inserted in the annular space between the screen and the temporary casing (or borehole wall). The filter material shall be placed progressively in stages to reduce the risk of a blockage in the annular space. The filter material shall preferably be placed via a tremie pipe.

— If necessary, a sealing plug of low permeability material (such as bentonite) shall be created in the annular space between the borehole wall and the well casing immediately above the filter material. The purpose of the sealing plug is to prevent infiltration of surface water, or water from other aquifers, into the well screen.

### 5.3.3 Preparation of the well

Prior to the pumping test the well shall be developed to increase the permeability of the soil around the shell by washing, and to remove any drilling residues and mobile soil particles that could be entrained by the water flow into the well. Such particles could clog the filter and damage the test pump.

Development shall be carried out by means of pumping. Possible methods include airlifting or pumping using a robust pump that is not damaged by the presence of particles in the discharge water. If airlift pumping is used, care shall be taken to avoid injecting air into the ground, as air bubbles in the ground can affect the permeability.



Other methods for well development may be used in combination with pumping, including:

— jetting with water inside the well screen;

— surging or swabbing inside the well screen to induce water flow into and out of the well;

— chemical treatment (e.g. use of acids in carbonate rocks).

## 5.4 Executing and equipping the piezometers

### 5.4.1 Installation procedure

Piezometers shall be installed in accordance with ISO 22475-1.

The piezometer tubes shall be installed at such a depth that the influence of the test well can be observed and recorded adequately. Where possible, the piezometer closest to the test well shall be located at the same depth as the bottom of the test well.

### 5.4.2 Preparation of piezometers

Before commencement of the test, piezometers shall be cleaned in accordance with ISO 22475-1. The water level in the piezometers shall be measured for a period before and after the test in order to find any natural variations in the groundwater level. Their response time shall be checked by watching the water rise in the piezometer tube. The period of monitoring depends on the nature of the aquifer and the purpose of the pumping test.

 