SLOVENSKI STANDARD
oSIST prEN 16261-3:2021

01-maj-2021

Pirotehnični izdelki - Ognjemet, kategorija F4 - 3. del: Preskusne metode

Pyrotechnic articles - Fireworks, Category F4 - Part 3: Test methods

Pyrotechnische Gegenstände - Feuerwerkskörper, Kategorie F4 - Teil 3: Prüfverfahren

Articles pyrotechniques - Artifices de divertissement, Catégorie F4 - Partie 3: Méthodes d'essai

Ta slovenski standard je istoveten z: prEN 16261-3

ICS:

71.100.30	Eksplozivi. Pirotehnika in ognjemeti	Explosives. Pyrotechnics and fireworks

oSIST prEN 16261-3:2021 **en**

EUROPEAN STANDARD

NORME EUROPÉENNE

EUROPÄISCHE NORM

DRAFT
prEN 16261-3

May 2021

ICS 71.100.30

Will supersede EN 16261-3:2012

English Version

Pyrotechnic articles - Fireworks, Category F4 - Part 3: Test methods

Articles pyrotechniques - Artifices de divertissement, Catégorie F4 - Partie 3: Méthodes d'essai

Pyrotechnische Gegenstände - Feuerwerkskörper, Kategorie 4 - Teil 3: Prüfverfahren

This draft European Standard is submitted to CEN members for enquiry. It has been drawn up by the Technical Committee CEN/TC 212.

If this draft becomes a European Standard, CEN members are bound to comply with the CEN/CENELEC Internal Regulations which stipulate the conditions for giving this European Standard the status of a national standard without any alteration.

This draft European Standard was established by CEN in three official versions (English, French, German). A version in any other language made by translation under the responsibility of a CEN member into its own language and notified to the CEN-CENELEC Management Centre has the same status as the official versions.

CEN members are the national standards bodies of Austria, Belgium, Bulgaria, Croatia, Cyprus, Czech Republic, Denmark, Estonia, Finland, France, Germany, Greece, Hungary, Iceland, Ireland, Italy, Latvia, Lithuania, Luxembourg, Malta, Netherlands, Norway, Poland, Portugal, Republic of North Macedonia, Romania, Serbia, Slovakia, Slovenia, Spain, Sweden, Switzerland, Turkey and United Kingdom.

Recipients of this draft are invited to submit, with their comments, notification of any relevant patent rights of which they are aware and to provide supporting documentation.

Warning : This document is not a European Standard. It is distributed for review and comments. It is subject to change without notice and shall not be referred to as a European Standard.

EUROPEAN COMMITTEE FOR STANDARDIZATION
COMITÉ EUROPÉEN DE NORMALISATION
EUROPÄISCHES KOMITEE FÜR NORMUNG

CEN-CENELEC Management Centre: Rue de la Science 23, B-1040 Brussels

Ref. No. prEN 16261-3:2021 E

Contents

Page

European foreword

This document (prEN 16261-3:2021) has been prepared by Technical Committee CEN/TC 212 "Pyrotechnic articles", the secretariat of which is held by NEN.

This document is currently submitted to the CEN Enquiry.

This document will supersede EN 16261-3:2012.

In comparison with the previous edition, the following technical modifications have been made:

— Addition of balances with different accuracies to clause 5.6;

— Clause 6.10.3 has been technically revised;

— A clause 6.12 on the use of detonative explosives has been added.

This document has been prepared under a mandate given to CEN by the European Commission and the European Free Trade Association, and supports essential requirements of Directive 2013/29/EU on the harmonisation of the laws of the Member States relating to the making available on the market of pyrotechnic articles.

For relationship with Directive 2013/29/EU, see informative Annex ZA, which is an integral part of this document.

1 Scope

This document specifies test methods for fireworks of category F4.

2 Normative references

The following documents are referred to in the text in such a way that some or all of their content constitutes requirements of this document. For dated references, only the edition cited applies. For undated references, the latest edition of the referenced document (including any amendments) applies.

EN 16261-1:—,[1] *Pyrotechnic articles - Fireworks, category F4 - Part 1: Terminology*

EN 16261-2:—,[2] *Pyrotechnic articles — Fireworks, Category F4 — Part 2: Requirements*

EN 61672-1, *Electroacoustics - Sound level meters - Part 1: Specifications (IEC 61672 1)*

ISO 13385-1:2019, *Geometrical product specifications (GPS) — Dimensional measuring equipment — Part 1: Design and metrological characteristics of callipers*

3 Terms and definitions

For the purposes of this document, the terms and definitions given in EN 16261-1:—[1] apply.

ISO and IEC maintain terminological databases for use in standardization at the following addresses:

— IEC Electropedia: available at https://www.electropedia.org/

— ISO Online browsing platform: available at https://www.iso.org/obp

4 Test environment for functioning test

4.1 General

A large unobstructed area, which shall be wide open. The measuring points shall be positioned appropriately for the type of measurement being carried out.

For aquatic fireworks, a water test area shall be available for testing the resistance to moisture and functioning in the expected manner.

4.2 Wind measurement

The wind speed at a height of 1,50 m above the ground shall be measured and recorded using a wind speed meter (see 5.5). No performance testing shall be carried out if the wind speed exceeds 5,0 m/s.

5 Apparatus

Any equivalent apparatus with the same accuracy or better may be used.

5.1 Timing device, capable of being read to the nearest 0,1 s.

5.2 Calliper, flat faced vernier reading to 0,1 mm, which shall conform to ISO 13385-1:2019.

---

[1] Under preparation. Stage at the time of publication: prEN 16261-1:2021.

[2] Under preparation. Stage at the time of publication: prEN 16261-2:2021.

5.3 Ruler, with a scale resolution of 1,0 mm or better.

5.4 Measuring tape, with a scale resolution of 10 mm or better.

5.5 Wind speed meter, accurate to at least 0,5 m/s.

5.6 Balance, with an accuracy of:

±0,01 g (for weight lower than 100 g)
±0,1 g (for weight lower than 1 000 g)
±1 g (for weight lower than 10 000 g)
±10 g (for weight upper or equal to 10 000 g)
or better.

5.7 Temperature chamber.

5.7.1 Up to (50 ± 2,5) °C.

5.7.2 Up to (75 ± 2,5) °C.

5.8 Sound level meter, class 1, which shall conform to EN 61672-1 with a free-field microphone.

5.9 Shock apparatus.

The apparatus shall provide a deceleration of 490 m/s² (−50/+100) m/s² (when measured at the centre of an unloaded platform) and the shock impulse duration (time elapsed from the starting of the machine's deceleration to the time in which the deceleration reaches its maximum value during each first shock pulse) shall be 2 ms ± 1 ms working at a frequency of 1 Hz ± 0,1 Hz.

An example of an apparatus is shown in Annex A.

5.10 Devices for measuring heights.

Heights shall be measured using universal surveying instruments (USI) such as theodolites, electronic spirit levels or video (visible and/or infrared) systems.

Examples of measuring methods and the calculation of the height are given in Annex B.

5.11 Goniometer, reading to 1° or better.

5.12 Mortar.

The rising height of shells depends particularly on the clearance of the shell in the mortar (ratio of the maximum cross section area of the shell (A_{Shell}) to the inner cross section area of the mortar (A_{mortar})), also designated as "Q". Q is the ratio of the outer diameter of the shell ($d_{o,shell}$, including the fuse to the lifting charge) squared over the inner diameter of the mortar ($d_{i,mortar}$) squared. The outer diameter of the shell shall be measured horizontally at the place of largest diameter including the fuse to the lifting charge. The following conditions shall be achieved:

$$0,9 \le Q = \frac{A_{shell}}{A_{mortar}} = \frac{d^2_{o,shell}}{d^2_{i,mortar}} \le 0,98$$

$$\sqrt{1,02 \cdot d^2_{o,shell}} \le d_{i,mortar} \le \sqrt{1,1 \cdot d^2_{o,shell}}$$

For calibre ≤ 100 mm, a wider tolerance can be accepted. The following conditions shall be achieved:

$$0,83 \le Q^{*}_{\le 100} \le 0,98$$

$$\sqrt{1,02 \cdot d^{2}_{\text{o,shell}}} \le d^{*}_{\text{i,mortar}} \le \sqrt{(1,2 \cdot d^{2}_{\text{o,shell}}}$$

Another determining factor influencing the rising height is the length of the mortar (l_{mortar}) – length from the mortar muzzle to the mortar ground.

The dimensions of the mortar may also be determined from Figures 1, 2 and 3.

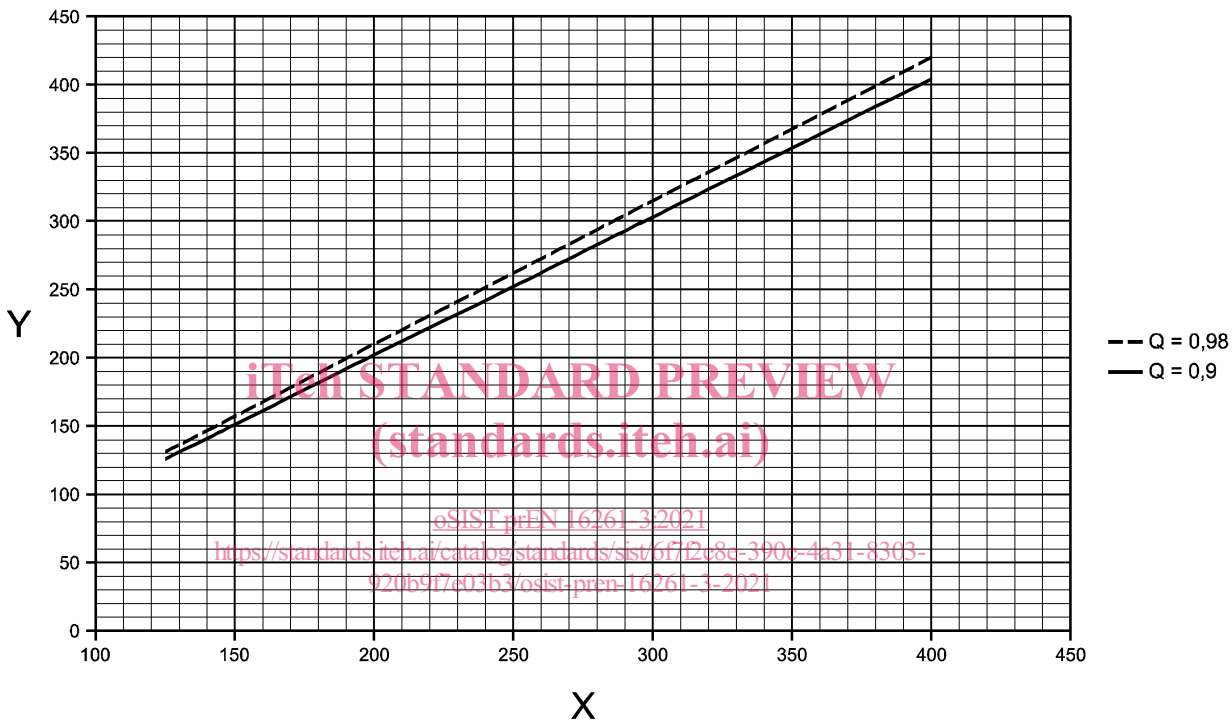

Key

X calibre of the shell (mm)

Y internal diameter of the mortar (mm)

Figure 1 — Dimensions of the mortars for spherical shells – Calibre above 100 mm

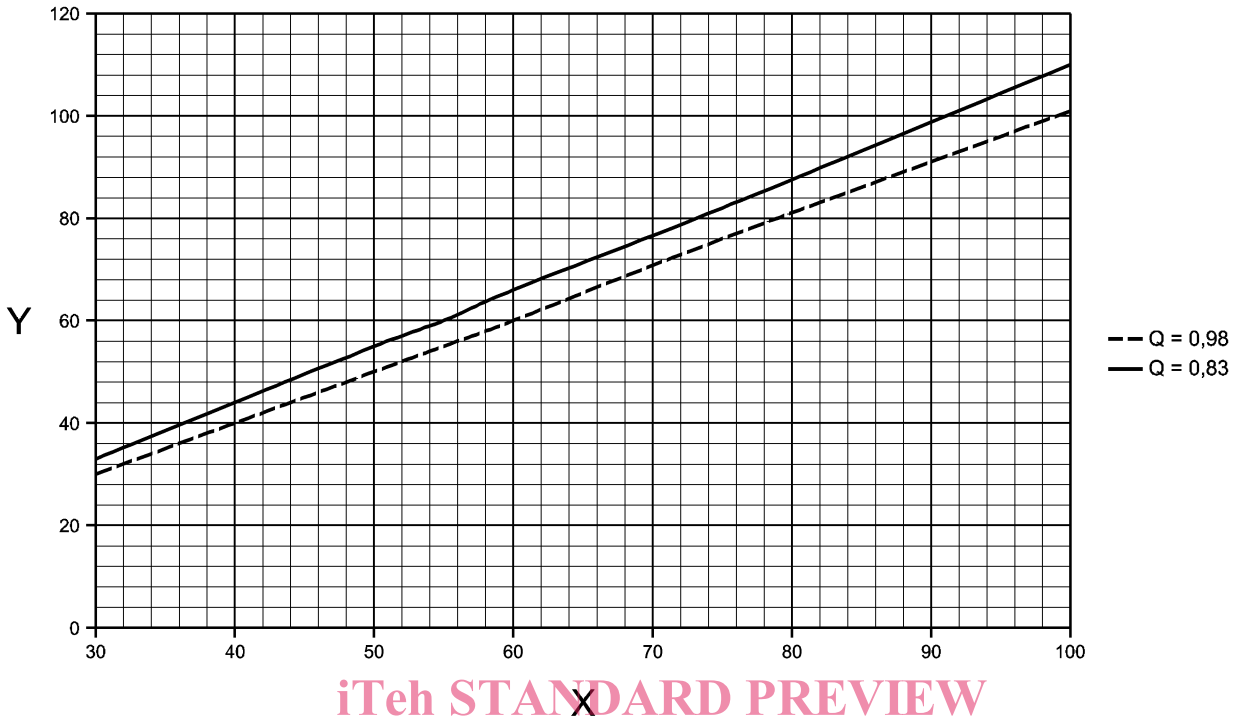

Key

X calibre of the shell (mm)

Y internal diameter of the mortar (mm)

Figure 2 — Dimensions of the mortars for spherical shells – Calibre up to 100 mm

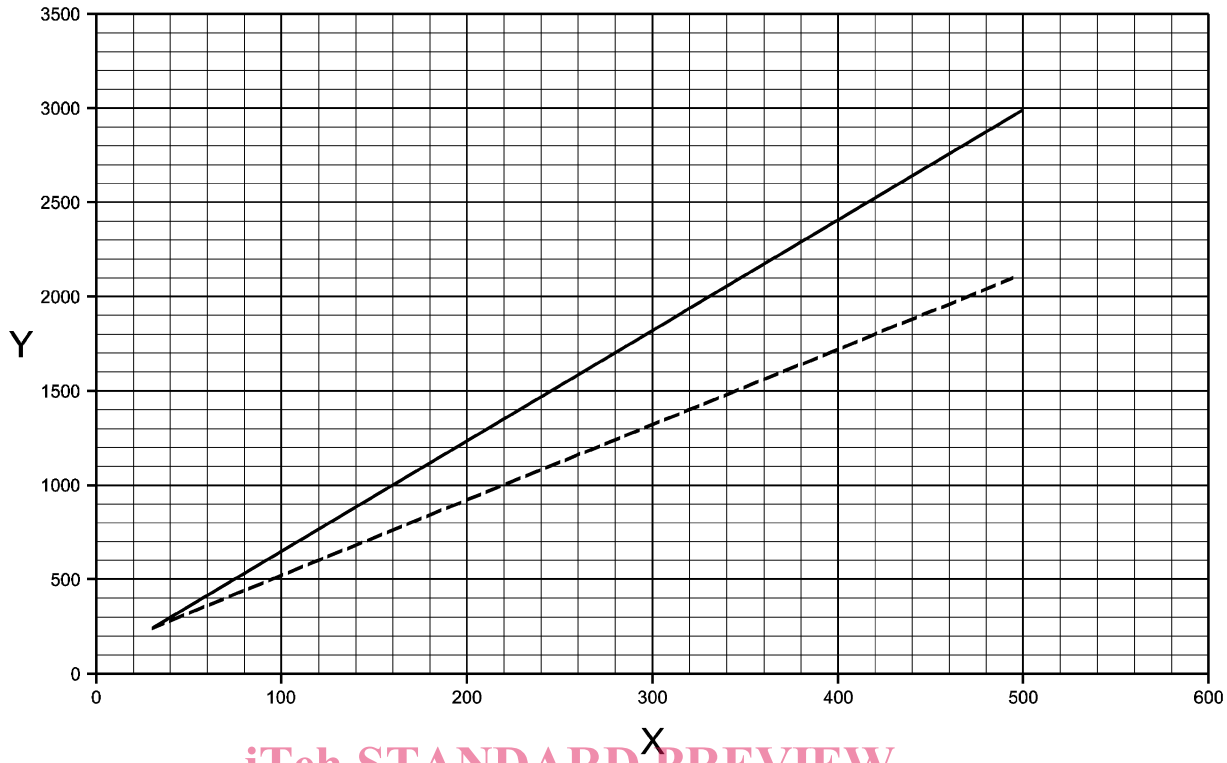

Key

X calibre of the shell (mm)

Y internal diameter of the mortar (mm)

—— $l_{mortar} = 6 \text{ X } d_n + 70$

– – $l_{mortar} = 4 \text{ X } d_n + 120$

$4 \text{ X } d_n + 120 \leq l_{mortar}$ (mm) $\leq 6 \text{ X } d_n + 70$

d_n nominal calibre

Figure 3 — Range of the mortar length for spherical shells

6 Test methods

NOTE Any equivalent method with the same sensitivity and the same accuracy or better might be used.

6.1 Construction and stability

6.1.1 Outer dimension of item

6.1.1.1 Apparatus

— Ruler (see 5.3).

6.1.1.2 Procedure

Use the ruler to measure the outer dimensions of the tested article to the nearest of 1,0 mm and record the results.

6.1.2 Determination of calibre

6.1.2.1 Apparatus

— Calliper (see 5.2).

6.1.2.2 Procedure

Use the calliper (see 5.2) to measure the calibre of the tested article at least three times at different positions on the article and to the nearest of 0,1 mm and record the results.

6.1.3 Determination of gross mass

Use the balance (see 5.6) to measure the gross mass of the tested article and record the results.

6.2 Design – Verification

Compare the actual article with the detailed manufacturer's drawing.

Observe and record any nonconformity.

6.3 Determination of tube angle

6.3.1 Apparatus

Goniometer (see 5.11).

6.3.2 Procedure

For determination of the tube angle, dismantle the functioned article (if necessary) in such a way that the angle of the tube against the vertical can be measured with goniometer (see Figure 4) and record the results.

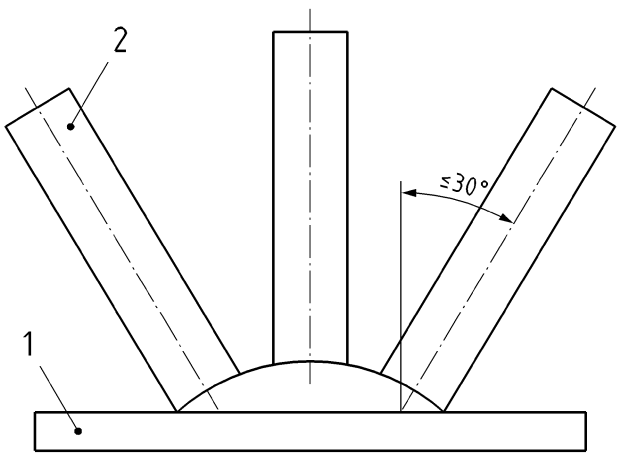

Key

1 base of firework

2 tube of mine, Roman candle or shot tube