INTERNATIONAL STANDARD

ISO 17201-3

Second edition
2019-01

Acoustics — Noise from shooting ranges —

Part 3: Sound propagation calculations

Acoustique — Bruit des stands de tir —

Partie 3: Calcul de la propagation du son

iTeh STANDARD PREVIEW
(standards.iteh.ai)
ISO 17201-3:2019
https://standards.iteh.ai/catalog/standards/sist/ffbb81e2-ed6f-40bd-8a0f-c472b4836e70/iso-17201-3-2019

Reference number
ISO 17201-3:2019(E)

© ISO 2019

iTeh STANDARD PREVIEW
(standards.iteh.ai)

ISO 17201-3:2019
https://standards.iteh.ai/catalog/standards/sist/ffbb81e2-ed6f-40bd-8a0f-c472b4836e70/iso-17201-3-2019

COPYRIGHT PROTECTED DOCUMENT

© ISO 2019

All rights reserved. Unless otherwise specified, or required in the context of its implementation, no part of this publication may be reproduced or utilized otherwise in any form or by any means, electronic or mechanical, including photocopying, or posting on the internet or an intranet, without prior written permission. Permission can be requested from either ISO at the address below or ISO's member body in the country of the requester.

ISO copyright office
CP 401 • Ch. de Blandonnet 8
CH-1214 Vernier, Geneva
Phone: +41 22 749 01 11
Fax: +41 22 749 09 47
Email: copyright@iso.org
Website: www.iso.org

Published in Switzerland

© ISO 2019 – All rights reserved

Contents

Page

Foreword ..... **iv**
Introduction ..... **v**
1 Scope **1**
2 Normative references **1**
3 Terms and definitions **1**
4 Source modelling **2**
4.1 General 2
4.2 Muzzle blast 2
4.2.1 Background 2
4.2.2 Free-field situation 3
4.2.3 Non-free-field situation 3
4.3 Projectile sound 6
5 Propagation calculation **6**
5.1 General 6
5.2 Application of ISO 9613-2 for free-field situations 6
5.3 Application of ISO 9613-2 for non-free-field situations 8
5.4 Sophisticated models 8
6 Conversion of sound exposure levels **9**
7 Uncertainties **10**
Annex A (normative) **Benchmark cases for shooting sheds with baffles** **11**
Annex B (informative) **Sophisticated modelling approaches** **27**
Annex C (informative) **Modelling of shooting scenarios — Examples of shooting ranges** **36**
Annex D (informative) **Uncertainty** **54**
Bibliography **58**

iTeh STANDARD PREVIEW
(standards.iteh.ai)
ISO 17201-3:2019
https://standards.iteh.ai/catalog/standards/sist/fb681e2-ed0f-40bd-8a0f-472b4836e70/iso-17201-3-2019

© ISO 2019 – All rights reserved

Foreword

ISO (the International Organization for Standardization) is a worldwide federation of national standards bodies (ISO member bodies). The work of preparing International Standards is normally carried out through ISO technical committees. Each member body interested in a subject for which a technical committee has been established has the right to be represented on that committee. International organizations, governmental and non-governmental, in liaison with ISO, also take part in the work. ISO collaborates closely with the International Electrotechnical Commission (IEC) on all matters of electrotechnical standardization.

The procedures used to develop this document and those intended for its further maintenance are described in the ISO/IEC Directives, Part 1. In particular the different approval criteria needed for the different types of ISO documents should be noted. This document was drafted in accordance with the editorial rules of the ISO/IEC Directives, Part 2 (see www.iso.org/directives).

Attention is drawn to the possibility that some of the elements of this document may be the subject of patent rights. ISO shall not be held responsible for identifying any or all such patent rights. Details of any patent rights identified during the development of the document will be in the Introduction and/or on the ISO list of patent declarations received (see www.iso.org/patents).

Any trade name used in this document is information given for the convenience of users and does not constitute an endorsement.

For an explanation on the meaning of ISO specific terms and expressions related to conformity assessment, as well as information about ISO's adherence to the World Trade Organization (WTO) principles in the Technical Barriers to Trade (TBT) see the following URL: www.iso.org/iso/foreword.html.

iTeh STANDARD PREVIEW
(standards.iteh.ai)

This document was prepared by ISO/TC 43, *Acoustics*, Subcommittee SC 1, *Noise*.

This second edition cancels and replaces the first edition (ISO 17201-3:2010), of which it constitutes a minor revision. The changes compared to the previous edition are as follows:

ISO 17201-3:2019
https://standards.iteh.ai/catalog/standards/iso/3e1e1e1d-8a0f-c472b4836e70/iso-17201-3-2019

— Formulae (B.1) and (B.3) have been corrected by insertion of F_0.

— Minor corrections have been made in Annex C.

A list of all parts in the ISO 17201 series can be found on the ISO website.

Any feedback or questions on this document should be directed to the user's national standards body. A complete listing of these bodies can be found at www.iso.org/members.html.

 © ISO 2019 – All rights reserved

Introduction

The initiative to prepare a standard on impulse noise from shooting ranges was taken by AFEMS, the Association of European Manufacturers of Sporting Ammunition, in April 1996 by the submission of a formal proposal to CEN. After consultation in CEN in 1998, CEN/TC 211, *Acoustics* asked ISO/TC 43, *Acoustics*, Subcommittee SC 1, *Noise* to prepare ISO 17201 (all parts).

This document provides guidance for sound propagation calculation of shooting sound from shooting ranges. If calculation procedures are not implied or specified by local or national guidelines, rules and regulations, and if a more sophisticated propagation model is not available, then ISO 9613-2 may be applied, provided that the recommendations in this document are observed.

The source energy of muzzle blast is typically measured or calculated for free-field conditions and often exhibits strong directivity. In many cases, firearms are fired within a shooting range which has structures such as firing sheds, walls or safety barriers. Guns, particularly shotguns, are sometimes fired in many directions, e.g. in trap and skeet where the shooting direction is dictated by the flight path of the clay target. This document recommends ways in which source data can be adapted for use with ISO 9613-2 to obtain a general survey for the sound exposure levels to be expected in the neighbourhood around shooting ranges.

iTeh STANDARD PREVIEW
(standards.iteh.ai)
ISO 17201-3:2019
https://standards.iteh.ai/catalog/standards/sist/ffbb81e2-ed6f-40bd-8a0f-c472b4836e70/iso-17201-3-2019

© ISO 2019 – All rights reserved

iTeh STANDARD PREVIEW
(standards.iteh.ai)

ISO 17201-3:2019
https://standards.iteh.ai/catalog/standards/sist/ffbb81e2-ed6f-40bd-8a0f-c472b4836e70/iso-17201-3-2019

Acoustics — Noise from shooting ranges —

Part 3:
Sound propagation calculations

1 Scope

This document specifies methods of predicting the sound exposure level of shooting sound for a single shot at a given reception point. Guidelines are given to calculate other acoustic indices from the sound exposure level. The prediction is based on the angular source energy distribution of the muzzle blast as defined in ISO 17201-1 or calculated using values from ISO 17201-2.

This document applies to weapons with calibres of less than 20 mm or explosive charges of less than 50 g TNT equivalent, at distances where peak pressures, including the contribution from projectile sound, are less than 1 kPa (154 dB).

NOTE National or other regulations, which could be more stringent, can apply.

2 Normative references

iTeh STANDARD PREVIEW
(standards.iteh.ai)

The following documents are referred to in the text in such a way that some or all of their content constitutes requirements of this document. For dated references, only the edition cited applies. For undated references, the latest edition of the referenced document (including any amendments) applies.

ISO 17201-3:2019
https://standards.iteh.ai/catalog/standards/sist/b0d31e2a-d68d-4b1a-8a06-c472b4836e70/iso-17201-3-2019

ISO 9613-2:1996, *Acoustics — Attenuation of sound during propagation outdoors — Part 2: General method of calculation*

ISO 17201-1:2018, *Acoustics — Noise from shooting ranges — Part 1: Determination of muzzle blast by measurement*

ISO/IEC Guide 98-3[1)], *Uncertainty of measurement — Part 3: Guide to the expression of uncertainty in measurement (GUM:1995)*

3 Terms and definitions

For the purposes of this document, the following terms and definitions apply.

ISO and IEC maintain terminological databases for use in standardization at the following addresses:

— ISO Online browsing platform: available at https://www.iso.org/obp

— IEC Electropedia: available at http://www.electropedia.org/

3.1
substitute source
substitute for a sound source and its *firing shed* (3.4) by a model source without a firing shed positioned in the centre of the opening of the firing shed to represent the emission in the direction of a reception point

3.2
safety barrier
<shooting ranges> barrier that is intended to stop projectiles leaving the range

1) ISO/IEC Guide 98-3 is published as a reissue of the Guide to the expression of uncertainty in measurement (GUM), 1995.

© ISO 2019 – All rights reserved

3.3
safety baffle
<shooting ranges> overhead barrier that is intended to stop projectiles leaving the range

3.4
firing shed
structure constructed to protect the shooters and their equipment from precipitation and wind, having an opening that allows shooting at a target located on open ground

3.5
shooting range
enclosed arrangement of *firing positions* (3.7) and matching targets which, depending on the design, may include such features as a *firing shed* (3.4), *safety barriers* (3.2), *safety baffles* (3.3), and unsafe areas

3.6
shooting facility
organizational entity consisting of one or more *shooting ranges* (3.5), and associated buildings and infrastructure

3.7
firing position
position of the shooter within a *shooting range* (3.5)

3.8
impact sound
sound produced by the projectile hitting the target

iTeh STANDARD PREVIEW
(standards.iteh.ai)

3.9
diffraction point
point on top of a barrier which provides the shortest path length for the sound travelling over the barrier to the reception point

ISO 17201-3:2019
https://standards.iteh.ai/catalog/standards/sist/ffbb81e2-ed6f-40bd-8a0f-c472b4836e70/iso-17201-3-2019

4 Source modelling

4.1 General

The basic quantities to be used are the angular source energy distribution, $S_q(\alpha)$, and angular source energy distribution level, $L_q(\alpha)$, as defined in ISO 17201-1. The angle between the line of fire and the line from the muzzle to the reception point is designated by α. If the gun is fired in a free-field situation, $S_q(\alpha)$ can be used to describe the muzzle blast. For rifle shots, projectile sound has to be included (see 4.3). Substitute sources can be used for shed situations and for the incorporation of reflection and diffraction to calculate the reception levels as if it was a free-field situation. Impact sound caused by the projectile hitting the target can usually be neglected. This document does not apply to projectiles containing a charge which is detonated at the target.

4.2 Muzzle blast

4.2.1 Background

For the non-free-field situation (such as a shed with one opening), the propagation model of ISO 9613-2 is insufficient, and more complex propagation models and calculation procedures are needed. Annex A provides a benchmark case and a demonstration of how sophisticated sound propagation approximations (see Annex B) may be used to describe the sound emitted from such a range, based on the free-field data of the angular source energy distribution levels. The sound emission is then expressed by the angular source energy distribution level of a substitute source positioned at a representative position in front or above the firing shed. All further calculations of the sound pressure level are carried out as specified in Clause 5 by a point source with directivity independent from the range, which may be formed by a shed, baffles and side walls, etc.

 © ISO 2019 – All rights reserved

4.2.2 Free-field situation

If the weapon under consideration is used outside a firing shed or similar structure, use the angular source energy distribution level, $L_q(\alpha)$, of the specific weapon/ammunition combination directly. If a shot is fired with a reflecting surface near the shooter, take the reflection into account. The directivity has to be adjusted accordingly. If the gun can be fired in varying horizontal and vertical directions, account for these directions separately. Examples of free-field situations are described in Annex C.

4.2.3 Non-free-field situation

4.2.3.1 Shooting shed

In this case, the shot is fired in a shed (see for example Annex B). Part of the energy radiated due to the muzzle blast is absorbed by the walls and the ground. If baffles and side walls are present, take the reflections from the ground, side walls and baffles into account (see Annex A). An absorbing ceiling within the shed can be considered to be state of the art. The remaining energy is emitted through the opening of the shed. Therefore, free-field data shall not be used directly. If no absorption occurs within the shed and at the baffles, the benchmark case is not a suitable model to describe the emitted sound energy.

Figure 1 depicts a shed with the side walls and safety overhead baffles.

iTeh STANDARD PREVIEW
(standards.iteh.ai)
ISO 17201-3:2019
https://standards.iteh.ai/catalog/standards/sist/ffbb81e2-ed6f-40bd-8a0f-c472b4836e70/iso-17201-3-2019

© ISO 2019 – All rights reserved

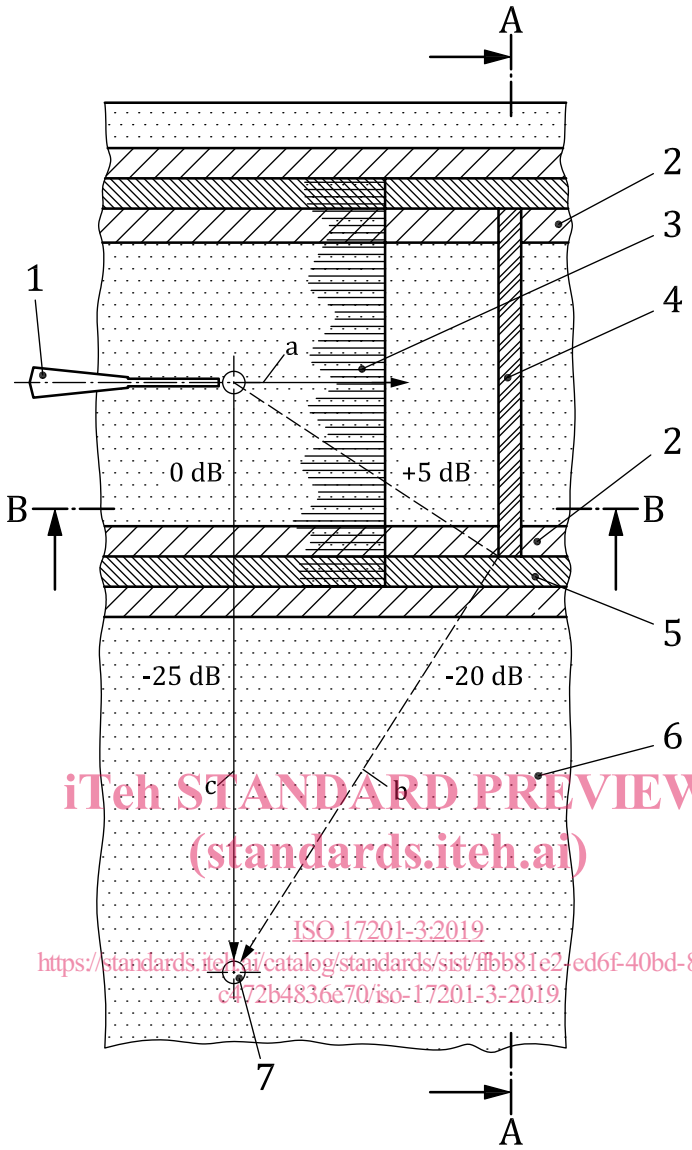

iTeh STANDARD PREVIEW
(standards.iteh.ai)
ISO 17201-3:2019
https://standards.iteh.ai/catalog/standards/sist/ffbb81e2-ed6f-40bd-8a0f-c472b4836e70/iso-17201-3-2019

a) Top view

© ISO 2019 – All rights reserved

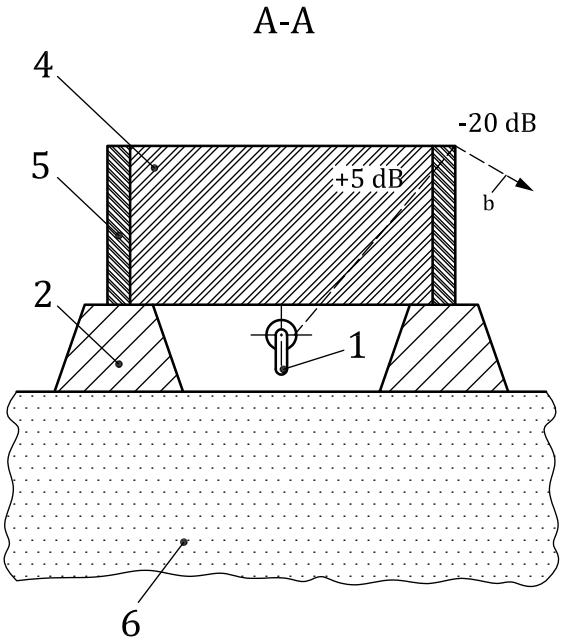

b) View in shooting direction

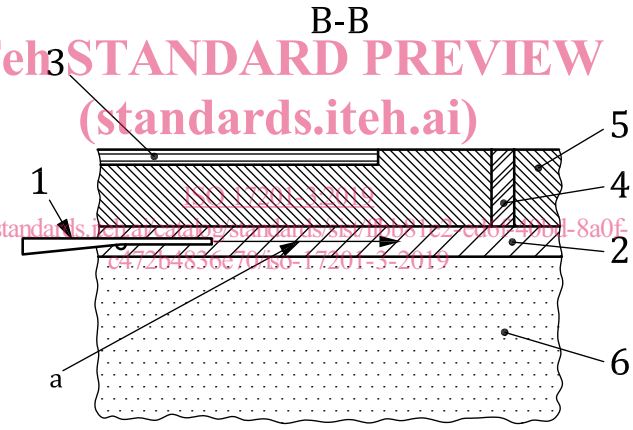

iTeh STANDARD PREVIEW
(standards.iteh.ai)
ISO 17201-3:2019
https://standards.iteh.ai/catalog/standards/sist/1bb81c2-cd6f-40bd-8a0f-c472b4836e70/iso-17201-3-2019

c) Side view

Key

1 gun/rifle
2 side berm
3 roof
4 safety baffle
5 barrier
6 ground
7 reception point
a Shooting direction.
b Diffracted sound.
c Shielded sound.

Figure 1 — Shooting shed situation and illustration of diffraction effects on the propagation path

4.2.3.2 More complex situations

For more complex situations consisting of different shooting facilities, such as a trap and skeet range together with rifle ranges for large and small calibres, a larger number of sources and substitute sources sometimes have to be included to adequately model the situation. These sources are considered incoherent. However, reflections are considered to be coherent, when at the reception point the time delay between the muzzle blast and its reflections is less than 3 ms. Then, they shall be modelled as one

© ISO 2019 – All rights reserved

substitute source. If the prediction focuses on F-time-weighted levels, substitute sources can combine multiple sound paths that have time delays within a time span less than (125/2) ms.

NOTE 62,5 ms is half the exponential time constant for time-weighting F (125 ms) as specified in IEC 61672-1:2013, 5.8.1.

4.3 Projectile sound

Modelling of projectile sound is described in ISO 17201-2 and ISO 17201-4. ISO 17201-4 also gives guidelines for the calculation of the propagation of projectile sound, as far as it deviates from the propagation of other sound. This means that for the attenuation for projectile sound, A_{excess}, ISO 9613-2 can also be used. The other attenuation parameters such as geometrical divergence, air absorption and non-linear attenuation are specified in ISO 17201-4. In free-field situations, especially in front of the weapon when the distance to the trajectory is short, projectile sound can be a relevant source for the sound exposure level of shooting sound. If a shot is fired in a shooting range, projectile sound is in general of minor importance in the estimation of the sound exposure level at a reception point. However, if measures are taken to reduce the sound emission of the muzzle blast, projectile sound can then become a dominant factor.

5 Propagation calculation

5.1 General

The propagation calculation may be performed using ray-tracing or more sophisticated models, which take specific weather conditions into account. To calculate a long-term L_{eq}, the results are weighted with respect to the frequency of occurrence of weather conditions pertinent to the time periods of interest during which the shooting range is operated.

iTeh STANDARD PREVIEW
(standards.iteh.ai)
ISO 17201-3:2019
https://standards.iteh.ai/catalog/standards/sist/6b81e2-ed6f-40bd-8a0f-c472b4836e70/iso-17201-3-2019

5.2 Application of ISO 9613-2 for free-field situations

ISO 9613-2 neither applies to shooting sound nor accounts for changes in sound pressure time history during propagation. It therefore cannot yield results for time-weighted metrics such as L_{Fmax} (see Clause 6). ISO 9613-2 does not adequately account for meteorological effects on sound propagation over distances greater than 1 km. Furthermore, the use of ISO 9613-2 is not recommended if the spectrum at the reception point is dominated by frequencies below 100 Hz.

However, ISO 9613-2 may be applied to model propagation of shooting sound if modifications are introduced.

The sound power level and the directivity have to be substituted by the angular source energy distribution level and the ambient level by the resulting sound exposure level, $L_E(f)$, at the reception point of one specific shot under favourable sound propagation conditions.

The sound exposure level for one shot fired is obtained by:

$$L_E(f) = L_q(\alpha, f) - A_{\text{div}}(r) + 11\,\text{dB} - A_{\text{atm}}(r, f) - A_{\text{bar}}(r, f) - A_{\text{gr}}(r, f) - A_{\text{z}}(r, f) - A_{\text{misc}}(r, f) \quad (1)$$

where

$L_q(\alpha, f)$ is the angular source energy distribution level, in decibels, of the weapon ammunition combination under consideration;

r is the distance, in metres, from the source or substitute source P(x_0, y_0, z_0) to the reception point P(x, y, z);

α is the angle between the line of fire and the line from the source to the reception point P(x, y, z), provided that the latter line does not interfere with a barrier;

 © ISO 2019 – All rights reserved

f is the centre frequency, in hertz, of any frequency band;

A_{div} is a correction, in decibels, for the geometric spread;

A_{atm} is the air absorption, in decibels, according to ISO 9613-1;

A_{bar} is the shielding by barrier, in decibels, according to ISO 9613-2;

A_{gr} is the ground effect, in decibels, according to ISO 9613-2;

A_{z} is a correction for non-standard meteorological conditions [see ISO 3741[2], ISO 3745[3], ISO 9614-3[4], and ISO 17201-1:2018, Formula (11)];

A_{misc} is a correction, in decibels, for miscellaneous other effects according to ISO 9613-2.

Concerning α, if the sound is shielded by a barrier, separate calculations for each point of diffraction are necessary. The angle, α, used to obtain $L_q(\alpha, f)$ is the angle between the line of fire and the line from the source point to the point of diffraction under consideration. This approach deviates from ISO 9613-2.

The insertion loss, A_{bar}, is related to sound exposure level in the direction of the point of diffraction (see example in Annex C) for the same distance between the reception point and the source point (see Reference [11]).

To include the ground effect and determine A_{gr}, ISO 9613-2:1996, 7.3.1 can be used. ISO 9613-2:1996, 7.3.2 can also be used, in which case an additional term D_Ω needs to be added to $L_q(\alpha, f)$. D_Ω can be determined by using ISO 9613-2:1996, Formula (11), or it can be set to 3 dB.

iTeh STANDARD PREVIEW

The calculation of $L_q(x, y, z, f)$ for a shed opening is specified in 5.3.

(standards.iteh.ai)

The long-term sound exposure level is obtained by:

ISO 17201-3:2019
https://standards.iteh.ai/catalog/standards/sist/ffbb81e2-ed6f-40bd-8a0f-c472b4836e70/iso-17201-3-2019

$$L_{E,\text{long term}} = L_E - C_{\mathrm{met}} \tag{2}$$

The way to obtain C_{met} depends strongly on the definition of the weather condition for which the sound exposure level, $L_E(f)$, is to be calculated. If the long-term L_{eq} is needed, take the long-term weather conditions at the site into account. If such information is not available, C_{met} for the long term $L_{\mathrm{A,eq}}$ can be determined according to ISO 9613-2:1996, Formula (22), using C_0 = 5 dB. By application of ray tracing models and long-term statistics of wind direction, wind speed and atmospheric stability, a more accurate value for long-term levels can be obtained (see References [12], [13]).

NOTE The value 5 dB for C_0 results from the assumption that favourable sound propagation conditions occur for one third of the time.

If ISO 9613-2 is applied, the following limitations are observed:

— For longer distances, ISO 9613-2 has the tendency to overestimate the long-term sound exposure level, $L_{E,\text{long term}}$, during daytime (Reference [14]).

— For downwind conditions, the effect of screens can be overestimated as a consequence of the induced air flow at the top of the screen (Reference [15]).

— During daytime, the barrier attenuation tends to be higher compared to the value obtained by ISO 9613-2 (Reference [16]).

— ISO 9613-2 does not consider diffraction apart from shielding. However, diffracted sound from safety baffles for example (see Figure 1) can produce a major contribution at the reception point.

Scattering is only approximately taken into account. That effect can be an important contribution to the overall level at a reception point for situations in which the sound sources are well shielded.

© ISO 2019 – All rights reserved

5.3 Application of ISO 9613-2 for non-free-field situations

For calculation of the sound immission in a non-free-field situation, more sophisticated sound propagation models are needed (see 5.4). These model calculations are usually very time consuming. Even if the distance between the shooting range and the reception point is not more than a few hundred metres, the calculation over all frequencies takes too long to be used for noise mapping.

Therefore the concept of the substitute source is introduced to allow the use of generally available software to calculate noise maps. A sophisticated model is used to calculate the sound exposure level, $L_E(f)$, at some immission-relevant reception points, P(x, y, z), which are far enough from the shed to allow the substitution of the original source and its direct surroundings by a point source with directivity characteristics. The distance between the range and such a reception point should at least be twice the largest dimension of the range. The position of the substitute source with the angular source energy distribution level, $L_{q,S}(x, y, z, f)$, for this reception site and other reception sites is chosen to be in the middle of the opening through which most of the sound energy travels. For a simple shed without barriers and baffles, the source point is chosen to be in the middle of the shed opening. For ranges with a shed and barriers and baffles, the position is chosen in the centre of the first opening (see Figure B.1, point P).

The calculated levels can also be chosen on a circle and the angular source energy distribution level can then be calculated according to the procedures specified for measurement in ISO 17201-1.

The angular source energy distribution level of the substitute source, $L_{q,S}(\alpha, f)$, is calculated from the exposure level using Formula (3).

$$L_{q,S}(\alpha, f) = L_E(x, y, z, f) + 11\,\text{dB} + A_{\text{div}}(r) \tag{3}$$

iTeh STANDARD PREVIEW
(standards.iteh.ai)

where

$L_E(x, y, z, f)$ is the sound exposure level, expressed in decibels, for frequency f at point P(x, y, z) obtained by boundary element method (BEM) or similar (see Annex B);

ISO 17201-3:2019
https://standards.iteh.ai/catalog/standards/sist/ffbb81e2-ed6f-40bd-8a0f-c472b4836e70/iso-17201-3-2019

$A_{\text{div}}(r)$ is the correction, expressed in decibels, for geometrical divergence between the assumed source position and point P(x, y, z);

r is the distance, in metres, between the chosen substitute source position and P(x, y, z).

In this model, the substitute source replaces the original source and its direct surroundings. If only the direction of α is of interest, Formula (1) can be applied directly. If the directivity is needed, as for example in a noise map, use the process specified in ISO 17201-1. A_{atm}, A_{bar}, A_{gr}, A_{misc} are excluded from the calculation of $L_{q,S}(\alpha)$. Only take into account barrier effects, etc. for those barriers which are not included in the calculation using the sophisticated model.

Figure 1 shows a typical shooting shed with the overhead baffles and side walls. In Annex A, the sound exposure level for a gun fired in such a shed is given. This has been calculated with the BEM over hard ground for a number of heights and positions in the surrounding. In the benchmark case, the ground reflection has been included; A_{atm}, A_{bar} and A_{misc} have been assumed to be zero.

For existing situations, it is recommended that the chosen sophisticated model be verified by measurement of the sound exposure level at the reception point, provided that the actual propagation conditions during the measurements are well defined. For propagation calculation outside the shed, the ground reflection has been included. Ensure that the same surface type is used for any sophisticated model as well as for the application of ISO 9613-2.

5.4 Sophisticated models

For the non-free-field situation, more sophisticated calculation models – compared to ISO 9613-2 – are needed. BEMs, ray-tracing models, wave models or combinations should be used in which reflection,

 © ISO 2019 – All rights reserved

diffraction and scattering can be taken into account in more detail (see Annex A, Annex B and References [17], [18], [19], [20]).

A benchmark case is given in Annex A for a shed as depicted in Figure A.1. This case has been calculated using BEM.

If other models or approximations are used such as

— Kirchhoff-approximation (see B.2),

— ray tracing models (see B.3),

ensure that the sound exposure levels of the benchmark case according to Annex A at 100 Hz and 200 Hz are reproduced by the levels of the sophisticated model without significant deviations. For distances twice as large, the model levels should not be greater than +5 dB and not less than −1 dB compared to the benchmark case:

$$L_{\text{benchmark}} + 5\ \text{dB} > L_{\text{model}} > L_{\text{benchmark}} - 1\ \text{dB} \tag{4}$$

with a probability of less than 5 %.

6 Conversion of sound exposure levels

Sound exposure level, L_E, is a widely used metric for sound from small arms. However, a number of metrics in legal codes or regulations generally used to describe small arms noise are based on the maximum level for a specific time weighting. An estimate of these metrics can be obtained from the relationships:

iTeh STANDARD PREVIEW
(standards.iteh.ai)

$$L_{\text{Smax}} \approx L_E \tag{5}$$

ISO 17201-3:2019
https://standards.iteh.ai/catalog/standards/sist/ffbb81e2-ed6f-40bd-8a0f-c472b4836e70/iso-17201-3-2019

$$L_{\text{Fmax}} \leq L_E + 9{,}0\ \text{dB} \tag{6}$$

$$L_{\text{Imax}} \leq L_E + 14{,}6\ \text{dB} \tag{7}$$

$$L_{\text{Imax}} \leq L_{\text{Fmax}} + 5{,}6\ \text{dB} \tag{8}$$

where

L_{Smax} is the highest S-time-weighted sound pressure level within a stated time interval, expressed in decibels;

L_{Fmax} is the highest F-time-weighted sound pressure level within a stated time interval, expressed in decibels;

L_{Imax} is the highest I-time-weighted sound pressure level within a stated time interval, expressed in decibels.

The equal sign is valid if the event duration is less than 10 % of the time constant of exponential time weighting, τ (S: τ =1 s, F: τ =0,125 s, I: the onset time constant τ =0,035 s differs from the decay time constant τ = 1,5 s), which is the case close to the source and if no reflections occur.

For increasing distances, the duration of the time signal increases, e.g. as a consequence of ground reflections. The sound pressure time history of the signal including its reflections needs to be calculated

© ISO 2019 – All rights reserved