INTERNATIONAL STANDARD

ISO 15

Fourth edition
2017-07

Rolling bearings — Radial bearings — Boundary dimensions, general plan

Roulements — Roulements radiaux — Dimensions d'encombrement, plan général

Reference number
ISO 15:2017(E)

ISO copyright office
Ch. de Blandonnet 8 • CP 401
CH-1214 Vernier, Geneva, Switzerland
Tel. +41 22 749 01 11
Fax +41 22 749 09 47
copyright@iso.org
www.iso.org

Contents

Page

Foreword

ISO (the International Organization for Standardization) is a worldwide federation of national standards bodies (ISO member bodies). The work of preparing International Standards is normally carried out through ISO technical committees. Each member body interested in a subject for which a technical committee has been established has the right to be represented on that committee. International organizations, governmental and non-governmental, in liaison with ISO, also take part in the work. ISO collaborates closely with the International Electrotechnical Commission (IEC) on all matters of electrotechnical standardization.

The procedures used to develop this document and those intended for its further maintenance are described in the ISO/IEC Directives, Part 1. In particular, the different approval criteria needed for the different types of ISO documents should be noted. This document was drafted in accordance with the editorial rules of the ISO/IEC Directives, Part 2 (see www.iso.org/directives).

Attention is drawn to the possibility that some of the elements of this document may be the subject of patent rights. ISO shall not be held responsible for identifying any or all such patent rights. Details of any patent rights identified during the development of the document will be in the Introduction and/or on the ISO list of patent declarations received (see www.iso.org/patents).

Any trade name used in this document is information given for the convenience of users and does not constitute an endorsement.

For an explanation on the voluntary nature of standards, the meaning of ISO specific terms and expressions related to conformity assessment, as well as information about ISO's adherence to the World Trade Organization (WTO) principles in the Technical Barriers to Trade (TBT), see the following URL: www.iso.org/iso/foreword.html.

This document was prepared by Technical Committee ISO/TC 4, *Rolling bearings*.

This fourth edition cancels and replaces the third edition (ISO 15:2011), which has been technically revised. The tables have been extended to incorporate dimensions of very large bearings.

Introduction

The objective of this document is to restrict the number of radial bearing sizes just enough to ensure economic production, yet provide a sufficient number of sizes to satisfy present and future needs of bearing users.

These needs are comprehensive and varying. Therefore, this document needs to embrace a wide range of numerically determined sizes and proportions and can even be extended according to the guidelines given in Annex A.

Tapered roller bearings, insert bearings and some types of needle roller bearings and instrument precision bearings standardized by ISO do not conform to this document because the dimensions given are not found to be optimal for the bearings in question.

Rolling bearings — Radial bearings — Boundary dimensions, general plan

1 Scope

This document specifies preferred boundary dimensions for radial bearings of the diameter series 7, 8, 9, 0, 1, 2, 3 and 4.

2 Normative references

The following documents are referred to in the text in such a way that some or all of their content constitutes requirements of this document. For dated references, only the edition cited applies. For undated references, the latest edition of the referenced document (including any amendments) applies.

ISO 464, *Rolling bearings — Radial bearings with locating snap ring — Dimensions, geometrical product specifications (GPS) and tolerance values*

ISO 5593, *Rolling bearings — Vocabulary*

ISO 12043, *Rolling bearings — Single-row cylindrical roller bearings — Chamfer dimensions for loose rib and non-rib sides*

ISO 12044, *Rolling bearings — Single-row angular contact ball bearings — Chamfer dimensions for outer ring non-thrust side*

3 Terms and definitions

For the purposes of this document, the terms and definitions given in ISO 5593 apply.

ISO and IEC maintain terminological databases for use in standardization at the following addresses:

— IEC Electropedia: available at http://www.electropedia.org/

— ISO Online browsing platform: available at http://www.iso.org/obp

4 Symbols

For the purposes of this document, the symbols given in ISO 15241[3] and the following apply.

The symbols shown in Figure 1 and given in Tables 1 to 8 denote nominal dimensions, unless specified otherwise.

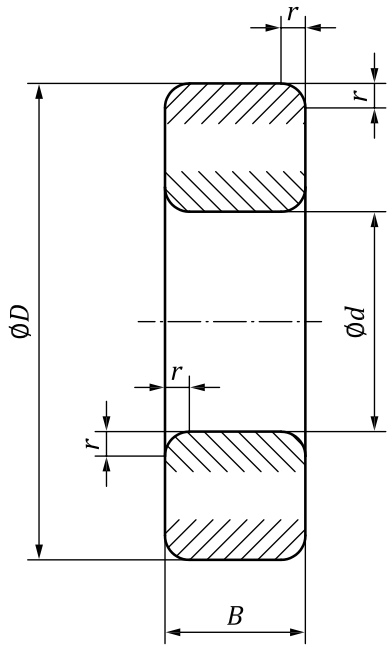

Key

B bearing width

D bearing outside diameter

d bearing bore diameter

r chamfer dimension

$r_{s\,min}$ smallest permissible single chamfer dimension

Figure 1 — Radial bearing

5 Boundary dimensions

Boundary dimensions for radial bearings of the diameter series 7, 8, 9, 0, 1, 2, 3 and 4 are given in Tables 1 to 8.

The chamfer dimensions given in Tables 1 to 8 do not always apply to the following:

— the groove side of bearing rings with snap ring groove (these shall be in accordance with ISO 464);

— the loose rib and the non-rib sides of cylindrical roller bearing rings (the exceptions shall be in accordance with ISO 12043);

— the non-thrust side of angular contact bearing outer rings (these shall be in accordance with ISO 12044).

Chamfer dimension, r, applies at the corners indicated in Figure 1 and is specified with $r_{s\,min}$ in Tables 1 to 8.

The chamfer dimensions for inner rings of bearings with tapered bore may be smaller than those shown in Tables 1 to 8.

The corresponding largest single chamfer dimensions to the $r_{s\,min}$ dimensions in Tables 1 to 8 are given in ISO 582[2].

Table 1 — Diameter series 7

Dimensions in millimetres

d	*D*	Dimension series				$r_{s\,min}$
		17	**27**	**37**	**47**	
		B				
0,6	2	0,8	—	—	—	0,05
1	2,5	1	—	—	—	0,05
1,5	3	1	—	1,8	—	0,05
2	4	1,2	—	2	—	0,05
2,5	5	1,5	1,8	2,3	—	0,08
3	6	2	2,5	3	—	0,08
4	7	2	2,5	3	—	0,08
5	8	2	2,5	3	—	0,08
6	10	2,5	3	3,5	—	0,1
7	11	2,5	3	3,5	—	0,1
8	12	2,5	—	3,5	—	0,1
9	14	3	—	4,5	—	0,1
10	15	3	—	4,5	—	0,1
12	18	4	—	5	—	0,2
15	21	4	—	5	—	0,2
17	23	4	—	5	—	0,2
20	27	4	—	5	7	0,2
22	30	4	—	5	7	0,2
25	32	4	—	5	7	0,2
28	35	4	—	5	7	0,2
30	37	4	—	5	7	0,2
32	40	4	—	6	8	0,2
35	44	5	—	7	9	0,3
40	50	6	—	8	10	0,3
45	55	6	—	8	10	0,3
50	62	6	—	10	12	0,3
55	68	7	—	10	13	0,3
60	75	7	—	12	15	0,3
65	80	7	—	12	15	0,3
70	85	7	—	12	15	0,3
75	90	7	—	12	15	0,3
80	95	7	—	12	15	0,3
85	105	10	—	15	—	0,6
90	110	10	—	15	—	0,6
95	115	10	—	15	—	0,6
100	120	10	—	15	—	0,6
105	125	10	—	15	—	0,6

Table 1 *(continued)*

d	*D*	Dimension series				$r_{s\,min}$
		17	**27**	**37**	**47**	
		B				
110	135	13	—	19	—	1
120	145	13	—	19	—	1
130	160	16	—	23	—	1
140	170	16	—	23	—	1
150	180	16	—	23	—	1
160	190	16	—	23	—	1
170	200	16	—	23	—	1
180	215	18	—	26	—	1,1
190	230	20	—	30	—	1,1
200	240	20	—	30	—	1,1

Table 2 — Diameter series 8

Dimensions in millimetres

d	*D*	Dimension series								
		08	**18**	**28**	**38**	**48**	**58**	**68**	**08**	**18 to 68**
		B							$r_{s\,min}$	
0,6	2,5	—	1	—	1,4	—	—	—	—	0,05
1	3	—	1	—	1,5	—	—	—	—	0,05
1,5	4	—	1,2	—	2	—	—	—	—	0,05
2	5	—	1,5	—	2,3	—	—	—	—	0,08
2,5	6	—	1,8	—	2,6	—	—	—	—	0,08
3	7	—	2	—	3	—	—	—	—	0,1
4	9	—	2,5	3,5	4	—	—	—	—	0,1
5	11	—	3	4	5	—	—	—	—	0,15
6	13	—	3,5	5	6	—	—	—	—	0,15
7	14	—	3,5	5	6	—	—	—	—	0,15
8	16	—	4	5	6	8	—	—	—	0,2
9	17	—	4	5	6	8	—	—	—	0,2
10	19	—	5	6	7	9	—	—	—	0,3
12	21	—	5	6	7	9	—	—	—	0,3
15	24	—	5	6	7	9	—	—	—	0,3
17	26	—	5	6	7	9	—	—	—	0,3
20	32	4	7	8	10	12	16	22	0,3	0,3
22	34	4	7	—	10	—	16	22	0,3	0,3
25	37	4	7	8	10	12	16	22	0,3	0,3
28	40	4	7	—	10	—	16	22	0,3	0,3

Table 2 *(continued)*

d	*D*	Dimension series								
		08	**18**	**28**	**38**	**48**	**58**	**68**	**08**	**18 to 68**
		B							$r_{s\,min}$	
30	42	4	7	8	10	12	16	22	0,3	0,3
32	44	4	7	—	10	—	16	22	0,3	0,3
35	47	4	7	8	10	12	16	22	0,3	0,3
40	52	4	7	8	10	12	16	22	0,3	0,3
45	58	4	7	8	10	13	18	23	0,3	0,3
50	65	5	7	10	12	15	20	27	0,3	0,3
55	72	7	9	11	13	17	23	30	0,3	0,3
60	78	7	10	12	14	18	24	32	0,3	0,3
65	85	7	10	13	15	20	27	36	0,3	0,6
70	90	8	10	13	15	20	27	36	0,3	0,6
75	95	8	10	13	15	20	27	36	0,3	0,6
80	100	8	10	13	15	20	27	36	0,3	0,6
85	110	9	13	16	19	25	34	45	0,3	1
90	115	9	13	16	19	25	34	45	0,3	1
95	120	9	13	16	19	25	34	45	0,3	1
100	125	9	13	16	19	25	34	45	0,3	1
105	130	9	13	16	19	25	34	45	0,3	1
110	140	10	16	19	23	30	40	54	0,6	1
120	150	10	16	19	23	30	40	54	0,6	1
130	165	11	18	22	26	35	46	63	0,6	1,1
140	175	11	18	22	26	35	46	63	0,6	1,1
150	190	13	20	24	30	40	54	71	0,6	1,1
160	200	13	20	24	30	40	54	71	0,6	1,1
170	215	14	22	27	34	45	60	80	0,6	1,1
180	225	14	22	27	34	45	60	80	0,6	1,1
190	240	16	24	30	37	50	67	90	1	1,5
200	250	16	24	30	37	50	67	90	1	1,5
220	270	16	24	30	37	50	67	90	1	1,5
240	300	19	28	36	45	60	80	109	1	2
260	320	19	28	36	45	60	80	109	1	2
280	350	22	33	42	52	69	95	125	1,1	2
300	380	25	38	48	60	80	109	145	1,5	2,1
320	400	25	38	48	60	80	109	145	1,5	2,1
340	420	25	38	48	60	80	109	145	1,5	2,1
360	440	25	38	48	60	80	109	145	1,5	2,1

Table 2 *(continued)*

d	*D*	Dimension series								
		08	**18**	**28**	**38**	**48**	**58**	**68**	**08**	**18 to 68**
		B							$r_{s\,min}$	
380	480	31	46	60	75	100	136	180	2	2,1
400	500	31	46	60	75	100	136	180	2	2,1
420	520	31	46	60	75	100	136	180	2	2,1
440	540	31	46	60	75	100	136	180	2	2,1
460	580	37	56	72	90	118	160	218	2,1	3
480	600	37	56	72	90	118	160	218	2,1	3
500	620	37	56	72	90	118	160	218	2,1	3
530	650	37	56	72	90	118	160	218	2,1	3
560	680	37	56	72	90	118	160	218	2,1	3
600	730	42	60	78	98	128	175	236	3	3
630	780	48	69	88	112	150	200	272	3	4
670	820	48	69	88	112	150	200	272	3	4
710	870	50	74	95	118	160	218	290	4	4
750	920	54	78	100	128	170	230	308	4	5
800	980	57	82	106	136	180	243	325	4	5
850	1 030	57	82	106	136	180	243	325	4	5
900	1 090	60	85	112	140	190	258	345	5	5
950	1 150	63	90	118	150	200	272	355	5	5
1 000	1 220	71	100	128	165	218	300	400	5	6
1 060	1 280	71	100	128	165	218	300	400	5	6
1 120	1 360	78	106	140	180	243	325	438	5	6
1 180	1 420	78	106	140	180	243	325	438	5	6
1 250	1 500	80	112	145	185	250	335	450	6	6
1 320	1 600	88	122	165	206	280	375	500	6	6
1 400	1 700	95	132	175	224	300	400	545	6	7,5
1 500	1 820	103	140	185	243	315	—	—	6	7,5
1 600	1 950	112	155	200	265	345	—	—	7,5	7,5
1 700	2 060	115	160	206	272	355	—	—	7,5	7,5
1 800	2 180	122	165	218	290	375	—	—	7,5	9,5
1 900	2 300	128	175	230	300	400	—	—	7,5	9,5
2 000	2 430	136	190	250	325	425	—	—	7,5	9,5
2 120	2 560	140	195	250	335	437	—	—	9,5	12
2 240	2 710	150	206	272	355	475	—	—	9,5	12
2 360	2 850	155	218	280	365	487	—	—	9,5	15
2 500	3 010	165	224	290	387	515	—	—	9,5	15