SLOVENSKI STANDARD
oSIST prEN ISO 24264:2020

01-januar-2020

Obutev - Trdnost pritrditve napetnikov (ISO/DIS 24264:2019)

Footwear - Attachement strength of top pieces (ISO/DIS 24264:2019)

Schuhe - Befestigungsstärke von Oberflecken (ISO/DIS 24264:2019)

Chaussures - Résistance de fixation des bonbouts (ISO/DIS 24264:2019)

Ta slovenski standard je istoveten z: prEN ISO 24264

ICS:

61.060 Obuvala Footwear

oSIST prEN ISO 24264:2020 en

DRAFT INTERNATIONAL STANDARD

ISO/DIS 24264

ISO/TC **216**

Secretariat: **UNE**

Voting begins on:
2019-10-21

Voting terminates on:
2020-01-13

Footwear — Attachment strength of top pieces

ICS: 61.060

This document is circulated as received from the committee secretariat.

ISO/CEN PARALLEL PROCESSING

Reference number
ISO/DIS 24264:2019(E)

ISO copyright office
CP 401 • Ch. de Blandonnet 8
CH-1214 Vernier, Geneva
Phone: +41 22 749 01 11
Fax: +41 22 749 09 47
Email: copyright@iso.org
Website: www.iso.org

Published in Switzerland

Contents

Page

Foreword

ISO (the International Organization for Standardization) is a worldwide federation of national standards bodies (ISO member bodies). The work of preparing International Standards is normally carried out through ISO technical committees. Each member body interested in a subject for which a technical committee has been established has the right to be represented on that committee. International organizations, governmental and non-governmental, in liaison with ISO, also take part in the work. ISO collaborates closely with the International Electrotechnical Commission (IEC) on all matters of electrotechnical standardization.

The procedures used to develop this document and those intended for its further maintenance are described in the ISO/IEC Directives, Part 1. In particular, the different approval criteria needed for the different types of ISO documents should be noted. This document was drafted in accordance with the editorial rules of the ISO/IEC Directives, Part 2 (see www.iso.org/directives).

Attention is drawn to the possibility that some of the elements of this document may be the subject of patent rights. ISO shall not be held responsible for identifying any or all such patent rights. Details of any patent rights identified during the development of the document will be in the Introduction and/or on the ISO list of patent declarations received (see www.iso.org/patents).

Any trade name used in this document is information given for the convenience of users and does not constitute an endorsement.

For an explanation of the voluntary nature of standards, the meaning of ISO specific terms and expressions related to conformity assessment, as well as information about ISO's adherence to the World Trade Organization (WTO) principles in the Technical Barriers to Trade (TBT), see www.iso.org/iso/foreword.html.

This document was prepared by Technical Committee ISO/TC 216, *Footwear.*

Footwear — Attachment strength of top pieces

1 Scope

This standard describes a method for determining the attachment pull-out strength of heel top pieces.

2 Normative references

The following documents, in whole or in part, are normatively referenced in this document and are indispensable for its application. For dated references, only the edition cited applies. For undated references, the latest edition of the referenced document (including any amendments) applies:

ISO 7500-1, *Metallic materials — Calibration and verification of static uniaxial testing machines — Part 1: Tension/compression testing machines — Calibration and verification of the force-measuring system*

ISO 18454, *Footwear — Standard atmospheres for conditioning and testing of footwear and components for footwear*

3 Apparatus and materials

3.1 A tensile testing machine with:

- A jaw separation rate of (100 ± 10) mm/min.
- A suitable force range for the sample to be tested, with 2 % accuracy, as specified for Class 2 in ISO 7500-1. For most cases, the adequate force range is 0 N to 1 000 N.
- A means of recording the force, as specified in ISO 7500-1, Class 2.
- A clamping device comprising:
  - o jaws the central shafts of which are aligned in the direction of the load applied that is perpendicular to the external edges of the jaws. The upper and lower jaws lie on the same plane;
  - o the jaws are manufactured in such a way that they are able to hold the test-piece and prevent it from slipping, and their edges do not cut or damage the test-piece.

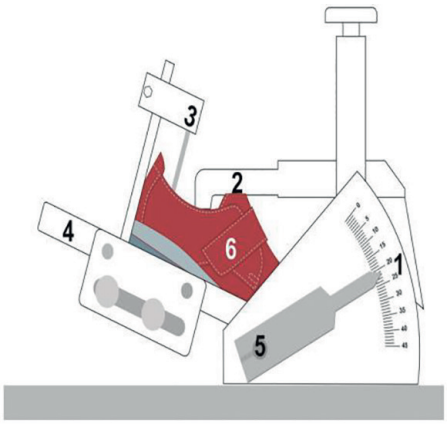

Figure 1 — Clamping device

3.2 A drill.

3.3 A knife or a similar cutting tool.

3.4 Steel cord of approximately 1 mm in diameter and a stop in one of its end of more than 2 mm in diameter.

4 Sampling and conditioning

At least three heels or shoes shall be tested.

Condition the samples 24 h before testing, according to ISO 18454, at (23 ± 2) °C and (50 ± 5) % relative humidity.

5 Preparation of test-pieces

Using the knife or a similar cutting tool cut out a part of the heel edge underneath the rear part of the top-piece. Then use the 2 mm bit to drill a hole through the overhanging part of the top piece. Clamp firmly the heel or the shoe in such a way that the top piece lies on top horizontally and they are prevented from moving during the test. Pass the steel cord through the hole, leaving the cord stop between the top piece and the heel (see Figure 2) and clamping the free end of the cord in the middle of the upper jaws.

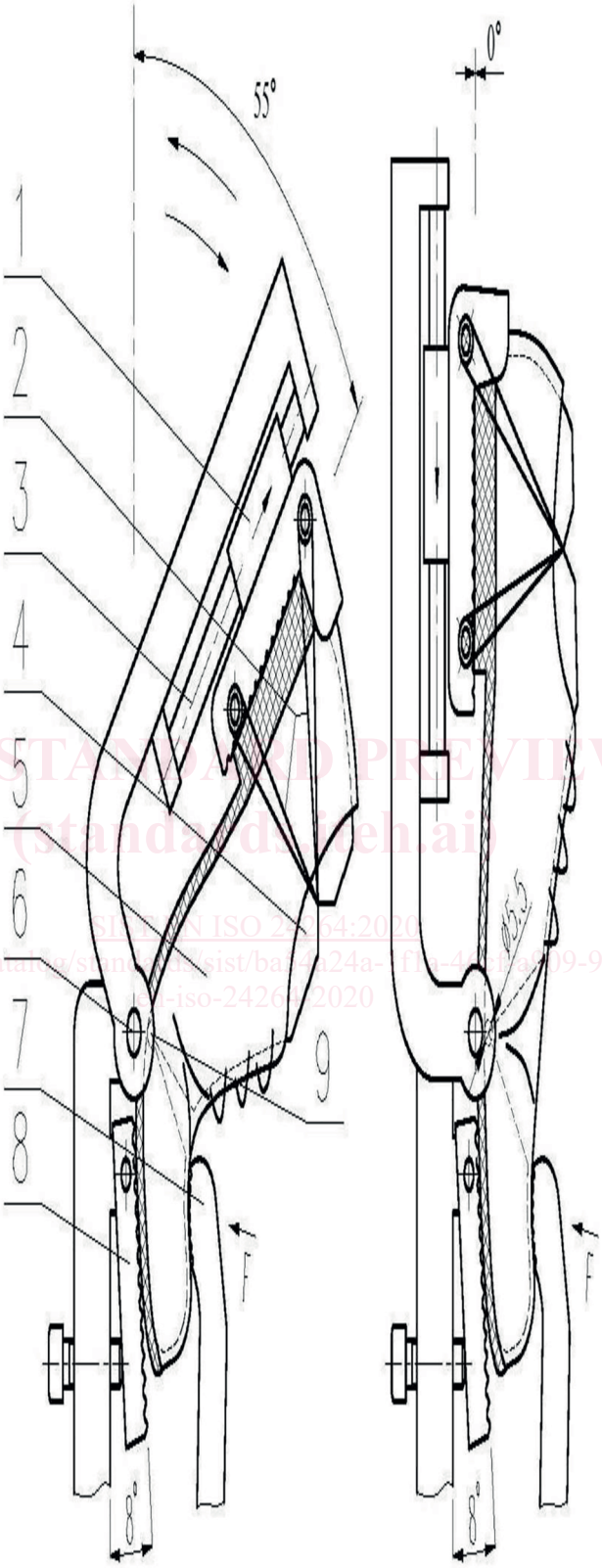

Figure 2 — Test piece placed in the tensile testing machine

6 Procedure

Run the tensile test machine until the top piece is completely separated and note the maximum force recorded.

In the case of top pieces with several pivots, several increases in forces will be recorded (one for each pivot); in that case, note the first maximum force recorded.

7 Expression of results

The results are expressed in N, recording the average force value obtained.

8 Test report

The test report shall contain the following information:

a) identification or description of the footwear tested (photograph is recommended);

b) reference to this European Standard;

c) the result obtained expressed in N;

d) date of test;

e) any deviation from the method given in this European Standard.

