DRAFT INTERNATIONAL STANDARD

ISO/DIS 24578

ISO/TC **113**/SC **1** Secretariat: **BIS**

Voting begins on: **2019-10-10**

Voting terminates on: **2020-01-02**

Hydrometry — Acoustic Doppler profiler — Method and application for measurement of flow in open channels

Hydrométrie — Profils Doppler acoustiques — Méthode et application pour le mesurage du débit en conduites ouvertes

ICS: 17.120.20

iTeh STANDARD PREVIEW
(standards.iteh.ai)
Full standard:
https://standards.iteh.ai/catalog/standards/sist/e98b454a-c042-418a-b105-9cb5bc2481c3/iso-dis-24578

THIS DOCUMENT IS A DRAFT CIRCULATED FOR COMMENT AND APPROVAL. IT IS THEREFORE SUBJECT TO CHANGE AND MAY NOT BE REFERRED TO AS AN INTERNATIONAL STANDARD UNTIL PUBLISHED AS SUCH.

IN ADDITION TO THEIR EVALUATION AS BEING ACCEPTABLE FOR INDUSTRIAL, TECHNOLOGICAL, COMMERCIAL AND USER PURPOSES, DRAFT INTERNATIONAL STANDARDS MAY ON OCCASION HAVE TO BE CONSIDERED IN THE LIGHT OF THEIR POTENTIAL TO BECOME STANDARDS TO WHICH REFERENCE MAY BE MADE IN NATIONAL REGULATIONS.

RECIPIENTS OF THIS DRAFT ARE INVITED TO SUBMIT, WITH THEIR COMMENTS, NOTIFICATION OF ANY RELEVANT PATENT RIGHTS OF WHICH THEY ARE AWARE AND TO PROVIDE SUPPORTING DOCUMENTATION.

This document is circulated as received from the committee secretariat.

Reference number
ISO/DIS 24578:2019(E)

© ISO 2019

iTeh STANDARD PREVIEW
(standards.iteh.ai)
Full standard:
https://standards.iteh.ai/catalog/standards/sist/e98b454a-c042-418a-b105-9cb5bc2481c3/iso-dis-24578

COPYRIGHT PROTECTED DOCUMENT

© ISO 2019

All rights reserved. Unless otherwise specified, or required in the context of its implementation, no part of this publication may be reproduced or utilized otherwise in any form or by any means, electronic or mechanical, including photocopying, or posting on the internet or an intranet, without prior written permission. Permission can be requested from either ISO at the address below or ISO's member body in the country of the requester.

ISO copyright office
CP 401 • Ch. de Blandonnet 8
CH-1214 Vernier, Geneva
Phone: +41 22 749 01 11
Fax: +41 22 749 09 47
Email: copyright@iso.org
Website: www.iso.org

Published in Switzerland

© ISO 2019 – All rights reserved

Contents

Page

Foreword ..... **v**

1 Scope **1**

2 Normative references **1**

3 Terms and definitions **1**

4 Principles of the boat mounted ADCP method **3**
4.1 General 3
4.2 Doppler principle applied to moving objects 5
4.3 Acoustic Doppler Current Profiler techniques 6
4.3.1 Introduction 6
4.3.2 Pulse incoherent 6
4.3.3 Pulse-to-pulse coherent 7
4.3.4 Broadband (Spread spectrum) 7
4.4 Measurement of velocity profile 7
4.4.1 General 7
4.4.2 Measurement of relative velocity 7
4.4.3 Measurement of boat velocity 7
4.4.4 Near boundary data collection 9
4.5 Speed of sound in water 11

5 Flow determination **12**
5.1 General method 12
5.2 Method dealing with moving-bed condition without GNSS system 14
5.2.1 Introduction 14
5.2.2 Stational method 14
5.2.3 Section-by-section method 15
5.2.4 Loop method 15
5.2.5 Subsection correction method 17
5.2.6 Azimuth method 18
5.3 Measurement procedure 18

6 Site selection **20**
6.1 General 20
6.2 Site-selection criteria 21

7 ADCP Deployment procedure **21**
7.1 Deployment techniques 21
7.1.1 Manned Boat mounted 21
7.1.2 Tethered boat 22
7.1.3 Deployment on a remote-control craft 22
7.1.4 Boat path 22
7.1.5 Boat speed 23
7.1.6 Data retrieval modes 23
7.2 Field procedures 23
7.2.1 Pre-field procedures 23
7.2.2 Field setup 24
7.2.3 Reviewing ADCP data during measurement 25
7.2.4 Configuration parameters 26
7.2.5 Post measurement requirements 27
7.3 Ancillary equipment 27
7.4 Others 28
7.4.1 Edge distances 28
7.4.2 Depth measurements at sites with high sediment concentrations 28
7.4.3 GNSS compass 28
7.5 Maintenance and ADCPchecks 28
7.5.1 General 28

iTeh STANDARD PREVIEW
(standards.iteh.ai)
Full standard:
https://standards.iteh.ai/catalog/standards/sist/e98b454a-c042-418a-b105-9cb5bc2481c3/iso-dis-24578

© ISO 2019 – All rights reserved

7.5.2 Built-in diagnostic check 28
7.5.3 Periodic major service 28
7.5.4 Periodic ADCP check 28
7.5.5 Physical maintenance 29
7.5.6 Beam-alignment test 29
7.6 Training 29

8 Uncertainty 29
8.1 General 29
8.2 Definition of uncertainty 30
8.3 Uncertainties in ADCP measurements – General considerations 31
8.4 Sources of uncertainty 31
8.5 Minimizing uncertainties 32

Annex A (informative) **Velocity distribution theory and the extrapolation of velocity profiles 33**

Annex B (informative) **Determination of discharge between banks and the area of measured discharge 36**

Annex C (informative) **Example of an equipment check list 39**

Annex D (informative) **Example of ADCP gauging field sheets 41**

Annex E (informative) **Beam alignment test 44**

Annex F (informative) **Uncertainty evaluation methods 46**

Bibliography 48

iTeh STANDARD PREVIEW
(standards.iteh.ai)
Full standard:
https://standards.iteh.ai/catalog/standards/sist/e98b454a-c042-418a-b105-9cb5bc2481c3/iso-dis-24578

© ISO 2019 – All rights reserved

Foreword

ISO (the International Organization for Standardization) is a worldwide federation of national standards bodies (ISO member bodies). The work of preparing International Standards is normally carried out through ISO technical committees. Each member body interested in a subject for which a technical committee has been established has the right to be represented on that committee. International organizations, governmental and non-governmental, in liaison with ISO, also take part in the work. ISO collaborates closely with the International Electrotechnical Commission (IEC) on all matters of electrotechnical standardization.

International Standards are drafted in accordance with the rules given in the ISO/IEC Directives, Part 2.

The main task of technical committees is to prepare International Standards. Draft International Standards adopted by the technical committees are circulated to the member bodies for voting. Publication as an International Standard requires approval by at least 75 % of the member bodies casting a vote.

In exceptional circumstances, when a technical committee has collected data of a different kind from that which is normally published as an International Standard ("state of the art", for example), it may decide by a simple majority vote of its participating members to publish a Technical Report. A Technical Report is entirely informative in nature and does not have to be reviewed until the data it provides are considered to be no longer valid or useful.

Attention is drawn to the possibility that some of the elements of this document may be the subject of patent rights. ISO shall not be held responsible for identifying any or all such patent rights.

ISO/DIS 24578 was prepared by Technical Committee ISO/TC 113, *Hydrometry*, Subcommittee SC 1, *Velocity area methods*.

iTeh STANDARD PREVIEW
(standards.iteh.ai)
Full standard:
https://standards.iteh.ai/catalog/standards/sist/e98b45aa-c042-418a-b105-9cb5bc2481c3/iso-dis-24578

© ISO 2019 – All rights reserved

iTeh STANDARD PREVIEW
(standards.iteh.ai)
Full standard:
https://standards.iteh.ai/catalog/standards/sist/e98b454a-c042-418a-b105-9cb5bc2481c3/iso-dis-24578

Hydrometry — Acoustic Doppler profiler — Method and application for measurement of flow in open channels

1 Scope

This Standard deals with the use of boat-mounted acoustic Doppler current profilers (ADCPs) for determining flow in open channels. It describes a number of methods of deploying ADCPs to determine flow. Although, in some cases, these measurements are intended to determine the stage-discharge relationship of a gauging station, this Standard deals only with single determination of discharge.

The term ADCP has been adopted as a generic term for a technology that is manufactured by various companies worldwide. They are also called acoustic Doppler velocity profilers (ADVPs) or acoustic Doppler profilers (ADPs). ADCPs can be used to measure a variety of parameters, such as current or stream flow, water velocity fields, and channel bathymetry. As a potential application, an idea of bedload discharge can be obtained applying the bottom track velocity, while suspended sediment flow can be obtained applying the acoustic backscatter and the sonar equation. This Standard is generic in form and contains no operational details specific to particular ADCP makes and models. Accordingly, to use this document effectively, it is essential that users are familiar with the terminology and functions of their own ADCP equipment. Users should also be familiar with additional requirements particular to their own country or agency.

Most of time the discharge value measured with an ADCP consist in averaging two or more pairs of transects depending on the river width and the expected uncertainty. The result of an ADCP gauging consists of a discharge value with the associated uncertainty.

iTeh STANDARD PREVIEW
(standards.iteh.ai)
Full standard:
https://standards.iteh.ai/catalog/standards/sist/e98b454a-c042-418a-b105-9cb5bc2481c3/iso-dis-24578

2 Normative references

The following referenced documents are indispensable for the application of this document. For dated references, only the edition cited applies. For undated references, the latest edition of the referenced document (including any amendments) applies.

ISO 772, *Hydrometry — Vocabulary and symbols*

ISO 748, *Hydrometry — Measurement of liquid flow in open channels using current-meters or floats*

3 Terms and definitions

For the purpose of this document, the terms and definitions given in ISO 772 and the following apply:

3.1
ADCP depth
transducer depth
draft
depth of the ADCP transducers below the water surface during deployment

Note 1 to entry: The ADCP depth should be measured manually.

3.2
bin
depth cell
truncated cone-shaped volume of water at a known distance and orientation from the transducers

Note 1 to entry: The ADCP determines an estimated velocity for each cell using a center-weighted averaging scheme, which takes account of the water not only in the bin itself but also in the two adjacent bins.

© ISO 2019 – All rights reserved

3.3
blank
blanking distance
distance travelled by the signal when the vibration of the transducer during transmission prevents the transducer from receiving echoes or return signals

Note 1 to entry: This is the distance immediately below the ACDP transducers in which no measurement is taken.

Note 2 to entry: The distance should be the minimum possible. However, care must be taken not to make the distance too short in order to avoid signal contamination by ringing or bias due to flow disturbance.

Note 3 to entry: If software allows it, blanking distance may be set to zero to reduce the blanking distance. During post-processing, user has option to choose to keep or reject this value near ADCP. This is useful when depth is very low.

3.4
bottom tracking
this acoustic method is used to measure boat speed and direction by computing the Doppler shift of sound reflected from the stream bed relative to the ADCP

Note 1 to entry: With no moving bed, the discharge can be computed with bottom velocity and water velocity data because this is done in ADCP coordinates not earth coordinates. With moving bed, the use of a Global Navigation Satellite System (GNSS) or loop-corrected data using a calibrated compass is required.

3.5
data retrieval mode
real-time mode
mode in which the ADCP relays information to the operating computer as it gathers it

Note 1 to entry: The ADCP and computer are connected (physically or wireless) throughout the deployment in this mode.

3.6
deployment
ADCP initialized and activated to collect data while the ADCP is propelled across the section to record data

Note 1 to entry: A deployment typically includes several pairs of transects or traverses across a river or estuary.

Note 2 to entry: When cross section measurements are not possible, the section by section method can be used.

3.7
deployment method
technique used to propel the ADCP across a watercourse

Note 1 to entry: One of three different deployment methods is used: a manned boat; a tethered boat; or a remote-controlled boat.

3.8
ensemble
profile
single measurement of the water column

Note 1 to entry: A column of bins is equivalent to a vertical in conventional current meter gauging.

3.9
ping
a ping is the entirety of the sound generated by an ADCP transducer for a single measurement cycle

Note 1 to entry: Sound pulses transmitted by the ADCP for a single measurement.

iTeh STANDARD PREVIEW
(standards.iteh.ai)
Full standard:
https://standards.iteh.ai/catalog/standards/sist/e98b454a-e042-418a-b105-9cb5bc2481c3/iso-dis-24578

 © ISO 2019 – All rights reserved

3.10
profiling mode
ADCP settings for type pattern of sound pulses

Note 1 to entry: Some types of equipment allow settings to be selected by the user.

Note 2 to entry: Different modes are suitable for different flow regimes, e.g. fast or slow, deep or shallow.

3.11
self-contained mode
autonomous mode
data retrieval mode in which the ADCP stores the information it gathers within its own memory and then downloaded to a computer after deployment.

Note 1 to entry: This method is generally not used by majority of ADCP practitioners nor recommended by the majority of hydrometric practitioners.

3.12
transect
pass
one sweep across the watercourse during an ADCP deployment

Note 1 to entry: In the self-contained mode, a deployment can consist of any number of transects.

iTeh STANDARD PREVIEW
(standards.iteh.ai)
Full standard:
https://standards.iteh.ai/catalog/standards/sist/e98b454a-c042-418a-b108-9b5bc2281c3/iso-dis-24578

4 Principles of the boat mounted ADCP method

4.1 General

The ADCP is a device for measuring current velocity and direction, throughout the water column, in an efficient and non-intrusive manner. It can produce an instantaneous velocity profile through the water column while disturbing only the top few decimetres. ADCPs nominally work using the Doppler principle (see 4.2). An ADCP is usually a cylinder with a transducer head on the end (see Figure 1). The transducer head is typically a ring of three or more acoustic transducers with their faces angled to the horizontal and at specified angles to each other. Some ADCPs use phased array transducers, which contain many elements that can form multiple beams at various angles, depending on transducer design. A single phased array transducer can form the three or more beams needed for an ADCP.

© ISO 2019 – All rights reserved

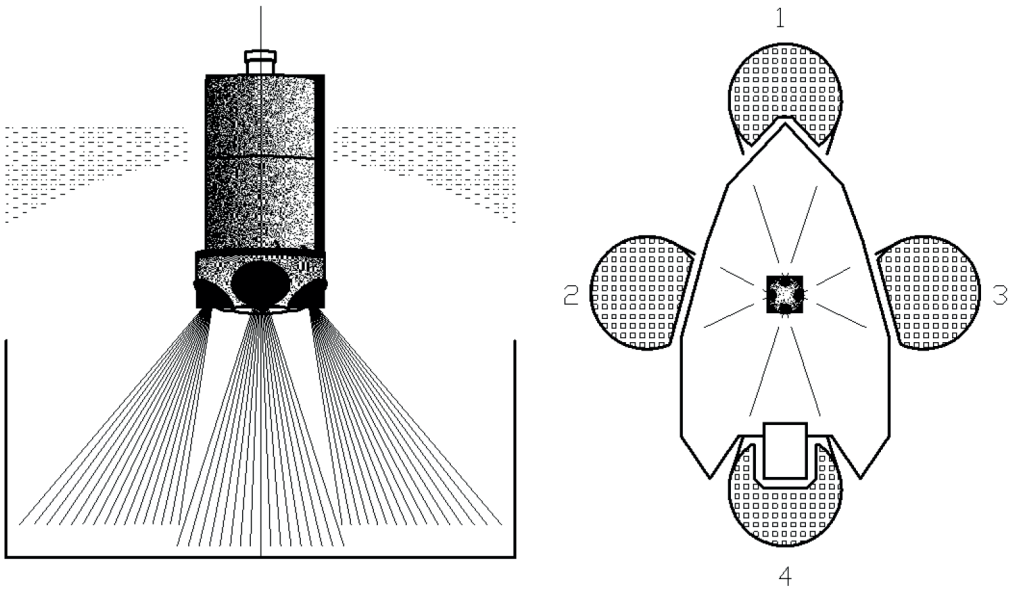

Key

1 forward
2 port
3 starboard
4 aft

Note ADCP can work in any position or orientation, this figure is an indicative illustration.

Figure 1 — Example sketch illustrating typical ADCP with four transducers

iTeh STANDARD PREVIEW
(standards.iteh.ai)
Full standard:
https://standards.iteh.ai/catalog/standards/sist/e98b454a-0f03-4188-b155-9cb5b2481c3/iso-dis-24578

The ADCP was originally developed for use in the study of ocean currents – tracking them and producing velocity profiles – and other oceanographic work. It has since been developed for use in estuaries and rivers. An ADCP can be mounted on a boat, flotation collar, or raft, and propelled across a river (see Figure 2). The ADCP collects measurements of velocity and direction of flow, depth, and speed/direction/position of boat as it goes. With such information, discharge values are independent of the path; in other words, the route taken does not need to be straight or perpendicular to the bank.

© ISO 2019 – All rights reserved

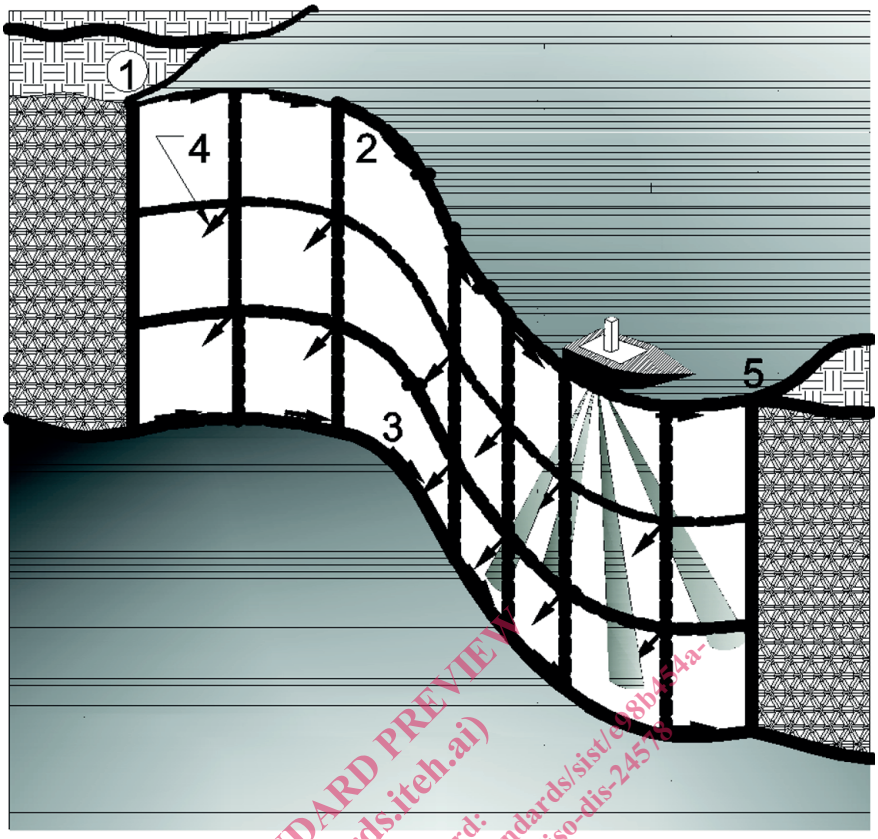

Key

1 start
2 path of boat
3 path of boat on river bottom
4 flow velocity vectors
5 finish

iTeh STANDARD PREVIEW
(standards.iteh.ai)
Full standard:
https://standards.iteh.ai/catalog/standards/sist/e98b454a-c042-418a-b105-9cb5bc2481c3/iso-dis-24578

Figure 2 — Sketch illustrating moving - boat ADCP deployment principles

4.2 Doppler principle applied to moving objects

The ADCP uses ultrasound to measure water velocity using a principle of physics discovered by Christian Doppler. The reflection of sound-waves from a moving particle causes a change in frequency to the reflected sound wave. The difference in frequency between the transmitted and reflected sound wave is known as the Doppler shift.

It should be noted that only components of velocity parallel to the direction of the sound wave produce a Doppler shift. Thus, particles moving at right angles to the direction of the sound waves (i.e. with no velocity components in the direction of the sound wave) will not produce a Doppler shift.

© ISO 2019 – All rights reserved

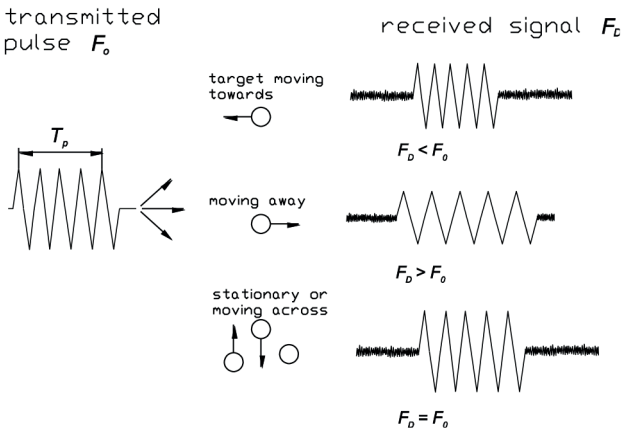

Figure 3 — Reflection of sound - waves by a moving particle results in an apparent change in the frequency of those sound waves

Doppler's principle relates the change in frequency to the relative velocities of the source (reflector) and the observer. In the case of most ADCPs, the transmitted sound is reflected off particulates or air bubbles in the water column and reflected back to the transducer. It is assumed that the particulates move at the same velocity as the water and from this the frequency shift can be translated to a velocity magnitude and direction. The particulates in river is generally suspended sediments. Too low SS concentration results no data because of no back signal, while too high SS disrupt the signal resulting not data. Therefore, ADCP frequency has to be chosen according with this criteria. The more suspended sediment that are in water, the lower the ADCP operating frequency has to be. In addition to that, it should also be noted that excessive air bubbles can cause distortion in, or loss of, the returned signal. Furthermore, air bubbles naturally rise and therefore are likely not to be travelling in a representative magnitude and direction. Likewise, excessive sediment in water can disrupt the signal.

iTeh STANDARD PREVIEW
(standards.iteh.ai)
https://standards.iteh.ai/catalog/standards/sist/e9bbc54a-c042-418a-b405-9cbbc48f5e3f/iso-dis-24578

4.3 Acoustic Doppler Current Profiler techniques

4.3.1 Introduction

There are three general types of ping configuration and processing algorithms used in ADCPs:

— pulse incoherent (including narrowband) – Doppler shift long pulse,

— pulse-to-pulse coherent – Doppler shift short pulse,

— broad band (spread spectrum) – phase shift on two short pulses.

Reference should be made to the ADCP manual to determine the type being used.

4.3.2 Pulse incoherent

An incoherent ADCP transmits a single, relatively long, pulse of sound and measures the Doppler shift, which is used to calculate the velocity of the particles along the path of the acoustic beam. The velocity measurements made using incoherent processing are very robust over a large velocity range, although they have a relatively high short-term (single ping) uncertainty. To reduce the uncertainty, multiple pulses are transmitted over a short time period; these are then averaged before reporting a velocity. "Narrowband" is used in the industry to describe a pulse-to-pulse incoherent ADCP. In a narrowband ADCP, only one pulse is transmitted into the water per beam per measurement (ping), and the resolution of the Doppler shift must take place during the duration of the received pulse. The narrowband acoustic pulse is a simple monochromatic wave and can be processed quickly.

© ISO 2019 – All rights reserved

4.3.3 Pulse-to-pulse coherent

Coherent ADCP systems are the most accurate of the three, although they have significant range limitations. Coherent systems transmit one, relatively short, pulse, record the return signal, and then transmit a second short pulse when the return from the first pulse is no longer detectable. The ADCP measures the phase difference between the two returns and uses this to calculate the Doppler shift. Velocity measurements made using coherent processing are very precise (low short-term uncertainties), but they have significant limitations. Coherent processing will work only in limited depth ranges and with a significantly limited maximum velocity. If these limitations are exceeded, velocity data from a coherent Doppler system are effectively meaningless.

4.3.4 Broadband (Spread spectrum)

Like coherent systems, broadband ADCP systems transmit two pulses and look at the phase change of the return from successive pulses. However, with broadband systems, both acoustic pulses are within the profiling range at the same time. The broadband acoustic pulse is complex; it has a code superimposed on the waveform. The code is imposed on the wave form by reversing the phase and creating a pseudo-random code within the wave form. This pseudo-random code allows a number of independent samples to be collected from a single ping. Due to the complexity of the pulse, the processing is slower than in a narrowband system; however, multiple independent samples are obtained from each ping.

The short-term uncertainty of velocity measurements using broadband processing is between that of incoherent and coherent systems. Broadband systems are capable of measuring over a wider velocity range than coherent systems; although, if this range is exceeded, the velocity data will be rendered meaningless. The accuracy and maximum velocity range of a broadband system is a function of the precise processing configuration used.

iTeh STANDARD PREVIEW
(standards.iteh.ai)
Full standard:
https://standards.iteh.ai/catalog/standards/sist/e98b454a-0042-41e4-b405-9cb5bc2481c3/iso-dis-24578

4.4 Measurement of velocity profile

4.4.1 General

ADCPs measure velocity profiles relative to the ADCP. In order to obtain an absolute velocity profile, a combination of relative velocity and boat velocity are necessary.

4.4.2 Measurement of relative velocity

The velocity is measured as a center-weighted average that spans the cells above and below as described in 3.2 and the result is reported at the depth of the cell center. With these results and using trigonometric relations, a 3-dimensional water velocity is computed and assigned to a given depth cell in the water column. Although this is analogous to a velocity profile obtained from a point velocity meter, the entire measurable region of the water column is sampled by the ADCP. The blanking distance exits since acoustic pulse requires to be stabilized (see Figure 5).

4.4.3 Measurement of boat velocity

4.4.3.1 Bottom tracking

The ADCP can use the Doppler principle to track their movements across a channel using a technique called “bottom tracking”. Bottom-tracking measurements are similar to water-velocity measurements, but separate pulses are used. Bottom-tracking pings are longer than water pings. These pings are also used to measure the depth of water. The sound pulses are reflected from the stream bed and used to calculate the velocity of the ADCP relative to the bed. ADCPs may also have an on-board compass and can combine this data with bottom-tracking data to determine boat direction and speed assuming the steam bed is stable.

In order to conduct the water and bottom tracking measurements, first, the ADCP sends a pulse to measure the boat velocity which is just the opposite of bottom velocity relative to the ADCP. Second, the ADCP sends a pulse to measure water velocity relative to the ADCP. Third, the ADCP combines these

© ISO 2019 – All rights reserved