SLOVENSKI STANDARD
oSIST prEN 3660-033:2022

01-september-2022

Aeronavtika - Dodatki za okrogle in pravokotne električne in optične konektorje - 033. del: Nerjavni jekleni ovijalni pas, vrsta Z, za pritrjevanje posameznih in/ali celotnih zaslonov na kabelske izvode - Standard za proizvod

Aerospace series - Cable outlet accessories for circular and rectangular electrical and optical connectors - Part 033: stainless steel banding band, style Z, for attachment of individual and /or overall screens to cable outlets - Product standard

Luft- und Raumfahrt - Endgehäuse für elektrische und optische Rund- und Rechtecksteckverbinder - Teil 033: Edelstahlspannband, Bauform Z, zum Anschluss von Einzel- und/oder Gesamtschirmen an Endgehäusen - Produktnorm

Série aérospatiale - Accessoires arrière pour connecteurs circulaires et rectangulaires électriques et optiques - Partie 033 : Bande de cerclage en acier inoxydable, type Z, pour fixation des blindages individuels et/ou complets aux raccords - Norme de produit

Ta slovenski standard je istoveten z: prEN 3660-033

ICS:

31.220.10	Vtiči in vtičnice, konektorji	Plug-and-socket devices. Connectors
49.060	Letalska in vesoljska električna oprema in sistemi	Aerospace electric equipment and systems

oSIST prEN 3660-033:2022 en,fr,de

EUROPEAN STANDARD

NORME EUROPÉENNE

EUROPÄISCHE NORM

DRAFT
prEN 3660-033

June 2022

ICS 49.060

Will supersede EN 3660-033:2019

English Version

Aerospace series - Cable outlet accessories for circular and rectangular electrical and optical connectors - Part 033: stainless steel banding band, style Z, for attachment of individual and /or overall screens to cable outlets - Product standard

Série aérospatiale - Accessoires arrière pour connecteurs circulaires et rectangulaires électriques et optiques - Partie 033 : Bande de cerclage en acier inoxydable, type Z, pour fixation des blindages individuels et/ou complets aux raccords - Norme de produit

Luft- und Raumfahrt - Endgehäuse für elektrische und optische Rund- und Rechtecksteckverbinder - Teil 033: Edelstahlspannband, Bauform Z, zum Anschluss von Einzel- und/oder Gesamtschirmen an Endgehäusen - Produktnorm

This draft European Standard is submitted to CEN members for enquiry. It has been drawn up by the Technical Committee ASD-STAN.

If this draft becomes a European Standard, CEN members are bound to comply with the CEN/CENELEC Internal Regulations which stipulate the conditions for giving this European Standard the status of a national standard without any alteration.

This draft European Standard was established by CEN in three official versions (English, French, German). A version in any other language made by translation under the responsibility of a CEN member into its own language and notified to the CEN-CENELEC Management Centre has the same status as the official versions.

CEN members are the national standards bodies of Austria, Belgium, Bulgaria, Croatia, Cyprus, Czech Republic, Denmark, Estonia, Finland, France, Germany, Greece, Hungary, Iceland, Ireland, Italy, Latvia, Lithuania, Luxembourg, Malta, Netherlands, Norway, Poland, Portugal, Republic of North Macedonia, Romania, Serbia, Slovakia, Slovenia, Spain, Sweden, Switzerland, Turkey and United Kingdom.

Recipients of this draft are invited to submit, with their comments, notification of any relevant patent rights of which they are aware and to provide supporting documentation.

Warning : This document is not a European Standard. It is distributed for review and comments. It is subject to change without notice and shall not be referred to as a European Standard.

EUROPEAN COMMITTEE FOR STANDARDIZATION
COMITÉ EUROPÉEN DE NORMALISATION
EUROPÄISCHES KOMITEE FÜR NORMUNG

CEN-CENELEC Management Centre: Rue de la Science 23, B-1040 Brussels

Contents

Page

European foreword

This document (prEN 3660-033:2022) has been prepared by the Aerospace and Defence Industries Association of Europe — Standardization (ASD-STAN).

After enquiries and votes carried out in accordance with the rules of this Association, this document has received the approval of the National Associations and the Official Services of the member countries of ASD-STAN, prior to its presentation to CEN.

This document is currently submitted to the CEN Enquiry.

This document will supersede EN 3660-033:2019.

1 Scope

This document defines a banding band, style Z, for terminating individual and/or overall cable screens to cable outlets. The bands delivered in flat condition F (see Clause 6) which need to be double wrapped prior to their installation. The bands delivered in condition C (see Clause 6) are factory pre-double wrapped and ready for installation.

2 Normative references

The following documents are referred to in the text in such a way that some or all of their content constitutes requirements of this document. For dated references, only the edition cited applies. For undated references, the latest edition of the referenced document (including any amendments) applies.

EN 2591 (all parts), [1], Aerospace series — Elements of electrical and optical connection — Test methods

EN 3660-001, *Aerospace series - Cable outlet accessories for circular and rectangular electrical and optical connectors - Part 001: Technical specification*

EN 3660-063, *Aerospace series - Cable outlet accessories for circular and rectangular electrical and optical connectors - Part 063: Cable outlet, style K, straight, for heat shrinkable boot, shielded, sealed, self-locking - Product standard*

A-A-59569, Braid, wire (copper, tin-coated, silver-coated, or nickel-coated, tubular or flat) [2])

SAE AS 81306/1, *Band installation tool, hand, one-step, for AS85049/128 connector accessory cable shield terminating bands*

SAE AS 81306/2, *Band installation tool, hand, two step terminal, for AS85049/128 connector accessory cable shield termination bands*

SAE AMS 2700, Passivation of Corrosion Resistant Steels[3])

ASTM A 240, *Standard Specification for, stainless and heat-resisting Chromium-Nickel Steel Plate, Sheet and Strip for Pressure Vessels for General Applications*[4])

ASTM A 967, Standard Specification for Chemical Passivation Treatments for Stainless Steel Parts[5])

3 Terms and definitions

For the purposes of this document, the terms and definitions given in EN 3660-001 apply.

ISO and IEC maintain terminological databases for use in standardization at the following addresses:

- ISO Online browsing platform: available at https://www.iso.org/obp
- IEC Electropedia: available at https://www.electropedia.org/

[1]) All parts quoted in this document.
[2]) Published by: NASA Electronic Parts and Packaging Program (NEPP), https://nepp.nasa.gov/.
[3]) Published by: National (US) Society of Automotive Engineers (SAE), http://www.sae.org/
[4]) Published by: International standards (ASTM), https://www.astm.org/
[5]) Published by: International standards (ASTM), https://www.astm.org/

4 Characteristics

4.1 Materials

The bands shall be manufactured from stainless steel, as specified in ASTM A 240/A 240M (S30400) and passivated in accordance with SAE AMS 2700 or ASTM A 967, or equivalent European standards.

The tinned copper braid used for testing shall be according to A-A-59569C with a 90 % coverage. The following sizes shall be used: A-A-59569 R30N0437 together with cable outlet EN 3660-063K-15AC and A-A-59569 R30N0875 together with cable outlet EN 3660-063K-19AH. Length of braid 250 mm to 260 mm.

4.2 Dimensions and mass

See Figure 1, Figure 2 and Table 1.

4.3 Delivery condition

See Figure 1 and Figure 2.

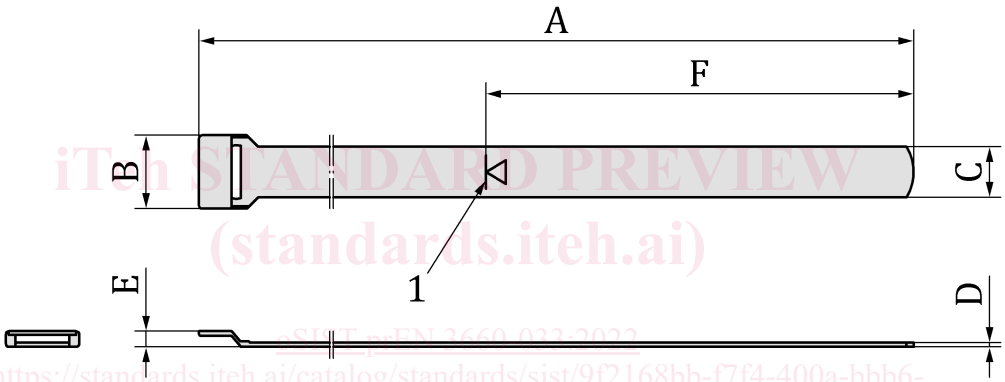

a) Flat condition

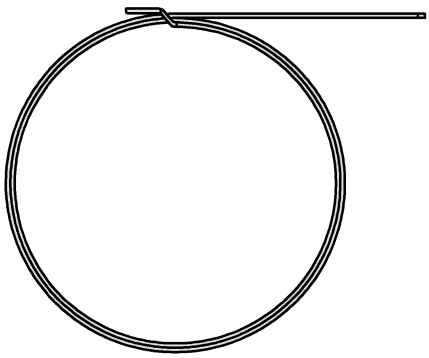

b) Pre-coiled condition

Key

1 Tail length indicator

Figure 1 — Variants A, B, C and D

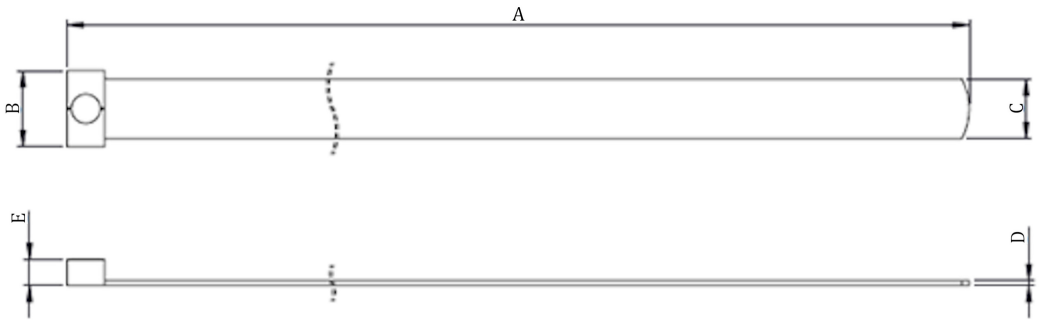

a) Flat condition

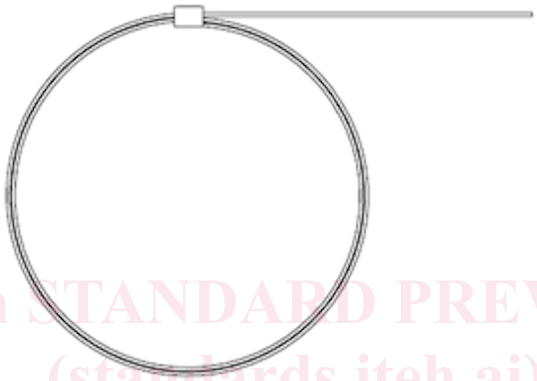

b) Pre-coiled condition

Figure 2 — Variants E and F

Table 1 — Dimensions and mass

Variants	*A* mm	*B* ±0,76 mm	*C* ±0,25 mm	*D* ±0,08 mm	*E* ±0,38 mm	*F* Ref mm	**Cable accommodation** dia max. mm	**Mass/100** max. g
A	360,42/ 363,47	8,89	6,22	0,48	1,88	52,00	47,80	1060
B	442,00/ 445,05	8,89	6,22	0,48	1,88	52,00	63,50	1290
C	204,72/ 207,77	4,95	2,92	0,38	1,35	52,00	22,40	250
D	360,42/ 363,47	4,95	2,92	0,38	1,35	52,00	47,80	425
E	354,08/ 363,47	8,33	6,22	0,48	2,54	-	47,80	1070
F	239,77/ 242,82	5,03	3,00	0,38	2,03	-	28,00	325

4.4 Installation tools

See Table 2.

Table 2 — Installation tools

Installation Tool	EN 3660-033 band variant	Tool type
EN 3660-03801	A and B	M81306/1–01 (See Note 1)
EN 3660-03802	C and D	M81306/1–02 (See Note 1)
EN 3660-03803	E	M81306/2–01 (See Note 2)
EN 3660-03804	F	M81306/2–02 (See Note 2)

NOTE 1 The single stage tools tension, fold and cut the band in 1 operational step.

NOTE 2 The two-stage tool set uses 1 tool to tension, partially fold and cut the band. A secondary tool is required to complete the folding process.

5 Tests

5.1 Tests and requirements

Table 3 — Tests

EN 2591-Test No.	Designation of the test	Not applicable	Applicable See EN 3660-001	Details
101	Visual examination	—	X	—
102	Examination of dimensions and mass	—	X	—
205	Housing (Shell) electrical continuity	—	X	The applied current shall be 100 mA ± 10 mA at a maximum of 1,5 V d c. The measurement shall be taken from a point on the braid, within 25 mm 0/-10 mm beyond the end of the cable outlet, and a point on the cable outlet at the opposite side of the band. See Figure 3. To be tested with 3660–063K-15AC and 3660–063K-19AH. Requirement < 1 mΩ
212	Surface transfer impedance (from 100MHz to 1GHz)	X	—	—
212	Shielding effectiveness (from 100 MHz to 1 GHz)	X	—	—
214	Indirect lightning strike	X	—	—
301	Endurance at temperature	—	X	260 °C for 1 000 h. With EN 3660-063K-15AC and 19AH
305	Rapid change of temperature	—	X	−65 °C; +260 °C; 30 min. With EN 3660-063K-15AC and 19AH
306	Mould growth	X	—	—
307	Salt mist	X	—	—
308	Sand and dust	X	—	—
-	Water Ingress Protection	X	—	—
315	Fluid resistance	X	—	—