SLOVENSKI STANDARD
SIST EN IEC 62714-2:2023

01-februar-2023

Nadomešča:

SIST EN 62714-2:2015

Oblika izmenjave tehničnih podatkov za uporabo v industrijskem inženiringu avtomatizacije sistemov - Označevalni jezik za avtomatizacijo - 2. del: Semantične knjižnice (IEC 62714-2:2022)

Engineering data exchange format for use in industrial automation systems engineering - Automation markup language - Part 2: Semantics libraries (IEC 62714-2:2022)

Datenaustauschformat für Planungsdaten industrieller Automatisierungssysteme - Automation markup language - Teil 2: Semantikbibliotheken (IEC 62714-2:2022)

Format d'échange de données technique pour une utilisation dans l'ingénierie des systèmes d'automatisation industrielle - Automation markup language - Partie 2: Bibliothèques de sémantique (IEC 62714-2:2022)

Ta slovenski standard je istoveten z: EN IEC 62714-2:2022

ICS:

25.040.40	Merjenje in krmiljenje industrijskih postopkov	Industrial process measurement and control
35.060	Jeziki, ki se uporabljajo v informacijski tehniki in tehnologiji	Languages used in information technology
35.240.50	Uporabniške rešitve IT v industriji	IT applications in industry

SIST EN IEC 62714-2:2023 en,fr,de

EUROPEAN STANDARD

NORME EUROPÉENNE

EUROPÄISCHE NORM

EN IEC 62714-2

November 2022

ICS 25.040.40; 35.060; 35.240.50

Supersedes EN 62714-2:2015

English Version

Engineering data exchange format for use in industrial automation systems engineering - Automation markup language - Part 2: Semantics libraries (IEC 62714-2:2022)

Format d'échange de données technique pour une utilisation dans l'ingénierie des systèmes d'automatisation industrielle - Automation markup language - Partie 2: Bibliothèques de sémantique (IEC 62714-2:2022)

Datenaustauschformat für Planungsdaten industrieller Automatisierungssysteme - Automation markup language - Teil 2: Semantikbibliotheken (IEC 62714-2:2022)

This European Standard was approved by CENELEC on 2022-11-24. CENELEC members are bound to comply with the CEN/CENELEC Internal Regulations which stipulate the conditions for giving this European Standard the status of a national standard without any alteration.

Up-to-date lists and bibliographical references concerning such national standards may be obtained on application to the CEN-CENELEC Management Centre or to any CENELEC member.

This European Standard exists in three official versions (English, French, German). A version in any other language made by translation under the responsibility of a CENELEC member into its own language and notified to the CEN-CENELEC Management Centre has the same status as the official versions.

CENELEC members are the national electrotechnical committees of Austria, Belgium, Bulgaria, Croatia, Cyprus, the Czech Republic, Denmark, Estonia, Finland, France, Germany, Greece, Hungary, Iceland, Ireland, Italy, Latvia, Lithuania, Luxembourg, Malta, the Netherlands, Norway, Poland, Portugal, Republic of North Macedonia, Romania, Serbia, Slovakia, Slovenia, Spain, Sweden, Switzerland, Türkiye and the United Kingdom.

European Committee for Electrotechnical Standardization
Comité Européen de Normalisation Electrotechnique
Europäisches Komitee für Elektrotechnische Normung

CEN-CENELEC Management Centre: Rue de la Science 23, B-1040 Brussels

Ref. No. EN IEC 62714-2:2022 E

European foreword

The text of document 65E/871/FDIS, future edition 2 of IEC 62714-2, prepared by SC 65E "Devices and integration in enterprise systems" of IEC/TC 65 "Industrial-process measurement, control and automation" was submitted to the IEC-CENELEC parallel vote and approved by CENELEC as EN IEC 62714-2:2022.

The following dates are fixed:

- latest date by which the document has to be implemented at national level by publication of an identical national standard or by endorsement (dop) 2023-08-24
- latest date by which the national standards conflicting with the document have to be withdrawn (dow) 2025-11-24

This document supersedes EN 62714-2:2015 and all of its amendments and corrigenda (if any).

Attention is drawn to the possibility that some of the elements of this document may be the subject of patent rights. CENELEC shall not be held responsible for identifying any or all such patent rights.

Any feedback and questions on this document should be directed to the users' national committee. A complete listing of these bodies can be found on the CENELEC website.

Endorsement notice

The text of the International Standard IEC 62714-2:2022 was approved by CENELEC as a European Standard without any modification.

In the official version, for Bibliography, the following notes have to be added for the standard indicated:

IEC 61512-1:1997 NOTE Harmonized as EN 61512-1:1999 (not modified)

IEC 62264-1:2013 NOTE Harmonized as EN 62264-1:2013 (not modified)

IEC 62714-3 NOTE Harmonized as EN 62714-3

Annex ZA
(normative)

Normative references to international publications with their corresponding European publications

The following documents are referred to in the text in such a way that some or all of their content constitutes requirements of this document. For dated references, only the edition cited applies. For undated references, the latest edition of the referenced document (including any amendments) applies.

NOTE 1 Where an International Publication has been modified by common modifications, indicated by (mod), the relevant EN/HD applies.

NOTE 2 Up-to-date information on the latest versions of the European Standards listed in this annex is available here: www.cenelec.eu.

Publication	Year	Title	EN/HD	Year
IEC 62714-1	2018	Engineering data exchange format for use in industrial automation systems engineering - Automation Markup Language - Part 1: Architecture and general requirements	EN IEC 62714-1	2018
IEC 61360	-	IEC Common Data Dictionary	-	-
IEC 62424	2016	Representation of process control engineering - Requests in P&I diagrams and data exchange between P&ID tools and PCE-CAE tools	EN 62424	2016
Extensible Markup Language (XML) 1.2	2008	W3C Recommendation	-	-

IEC 62714-2

Edition 2.0 2022-10

INTERNATIONAL STANDARD

NORME INTERNATIONALE

colour inside

Engineering data exchange format for use in industrial automation systems engineering – Automation markup language – Part 2: Semantics libraries

Format d'échange de données technique pour une utilisation dans l'ingénierie des systèmes d'automatisation industrielle – Automation markup language – Partie 2: Bibliothèques de sémantique

INTERNATIONAL
ELECTROTECHNICAL
COMMISSION

COMMISSION
ELECTROTECHNIQUE
INTERNATIONALE

ICS 25.040.40; 35.060; 35.240.50

ISBN 978-2-8322-5934-4

Warning! Make sure that you obtained this publication from an authorized distributor.
Attention! Veuillez vous assurer que vous avez obtenu cette publication via un distributeur agréé.

CONTENTS

INTERNATIONAL ELECTROTECHNICAL COMMISSION

ENGINEERING DATA EXCHANGE FORMAT FOR USE IN INDUSTRIAL AUTOMATION SYSTEMS ENGINEERING – AUTOMATION MARKUP LANGUAGE –

Part 2: Semantics libraries

FOREWORD

1) The International Electrotechnical Commission (IEC) is a worldwide organization for standardization comprising all national electrotechnical committees (IEC National Committees). The object of IEC is to promote international co-operation on all questions concerning standardization in the electrical and electronic fields. To this end and in addition to other activities, IEC publishes International Standards, Technical Specifications, Technical Reports, Publicly Available Specifications (PAS) and Guides (hereafter referred to as "IEC Publication(s)"). Their preparation is entrusted to technical committees; any IEC National Committee interested in the subject dealt with may participate in this preparatory work. International, governmental and non-governmental organizations liaising with the IEC also participate in this preparation. IEC collaborates closely with the International Organization for Standardization (ISO) in accordance with conditions determined by agreement between the two organizations.

2) The formal decisions or agreements of IEC on technical matters express, as nearly as possible, an international consensus of opinion on the relevant subjects since each technical committee has representation from all interested IEC National Committees.

3) IEC Publications have the form of recommendations for international use and are accepted by IEC National Committees in that sense. While all reasonable efforts are made to ensure that the technical content of IEC Publications is accurate, IEC cannot be held responsible for the way in which they are used or for any misinterpretation by any end user.

4) In order to promote international uniformity, IEC National Committees undertake to apply IEC Publications transparently to the maximum extent possible in their national and regional publications. Any divergence between any IEC Publication and the corresponding national or regional publication shall be clearly indicated in the latter.

5) IEC itself does not provide any attestation of conformity. Independent certification bodies provide conformity assessment services and, in some areas, access to IEC marks of conformity. IEC is not responsible for any services carried out by independent certification bodies.

6) All users should ensure that they have the latest edition of this publication.

7) No liability shall attach to IEC or its directors, employees, servants or agents including individual experts and members of its technical committees and IEC National Committees for any personal injury, property damage or other damage of any nature whatsoever, whether direct or indirect, or for costs (including legal fees) and expenses arising out of the publication, use of, or reliance upon, this IEC Publication or any other IEC Publications.

8) Attention is drawn to the Normative references cited in this publication. Use of the referenced publications is indispensable for the correct application of this publication.

9) Attention is drawn to the possibility that some of the elements of this IEC Publication may be the subject of patent rights. IEC shall not be held responsible for identifying any or all such patent rights.

IEC 62714-2 has been prepared by subcommittee 65E: Devices and integration in enterprise systems, of IEC technical committee 65: Industrial-process measurement, control and automation. It is an International Standard.

This second edition cancels and replaces the first edition published in 2015. This edition constitutes a technical revision.

This edition includes the following significant technical changes with respect to the previous edition:

a) additional explanation about usage of external semantics in AML Attributes;

b) adaption to CAEX V3.0;

c) additional new RoleClasses e.g. for Industrie 4.0.

The text of this International Standard is based on the following documents:

Draft	Report on voting
65E/871/FDIS	65E/889/RVD

Full information on the voting for its approval can be found in the report on voting indicated in the above table.

The language used for the development of this International Standard is English.

This document was drafted in accordance with ISO/IEC Directives, Part 2, and developed in accordance with ISO/IEC Directives, Part 1 and ISO/IEC Directives, IEC Supplement, available at www.iec.ch/members_experts/refdocs. The main document types developed by IEC are described in greater detail at www.iec.ch/standardsdev/publications.

A list of all parts in the IEC 62714 series, published under the general title *Engineering data exchange format for use in industrial automation systems engineering – Automation Markup Language*, can be found on the IEC website.

The committee has decided that the contents of this document will remain unchanged until the stability date indicated on the IEC website under webstore.iec.ch in the data related to the specific document. At this date, the document will be

- reconfirmed,
- withdrawn,
- replaced by a revised edition, or
- amended.

IMPORTANT – The "colour inside" logo on the cover page of this document indicates that it contains colours which are considered to be useful for the correct understanding of its contents. Users should therefore print this document using a colour printer.

INTRODUCTION

The data exchange format defined in IEC 62714 (Automation Markup Language, AML) is an XML schema based data format and has been developed in order to support the data exchange between engineering tools in a heterogeneous engineering tool landscape. IEC 62714-1 gives an overview about the format.

The goal of AML is to interconnect engineering tools from the existing heterogeneous tool landscape in their different disciplines, e.g. mechanical plant engineering, electrical design, process engineering, process control engineering, HMI development, PLC programming, robot programming, etc.

AML stores engineering information following the object oriented paradigm and allows modelling of physical and logical plant components as data objects encapsulating different aspects. An object may consist of other sub-objects and may itself be part of a larger composition or aggregation. Typical objects in plant automation comprise information on topology, geometry, kinematics and logic, whereas logic comprises sequencing, behaviour and control.

AML combines existing industry data formats that are designed for the storage and exchange of different aspects of engineering information. These data formats are used on an "as-is" basis within their own specifications and are not branched for AML needs.

The core of AML is the top-level data format CAEX that connects the different data formats. Therefore, AML has an inherent distributed document architecture.

Figure 1 illustrates the basic AML architecture and the distribution of topology, geometry, kinematic and logic information.

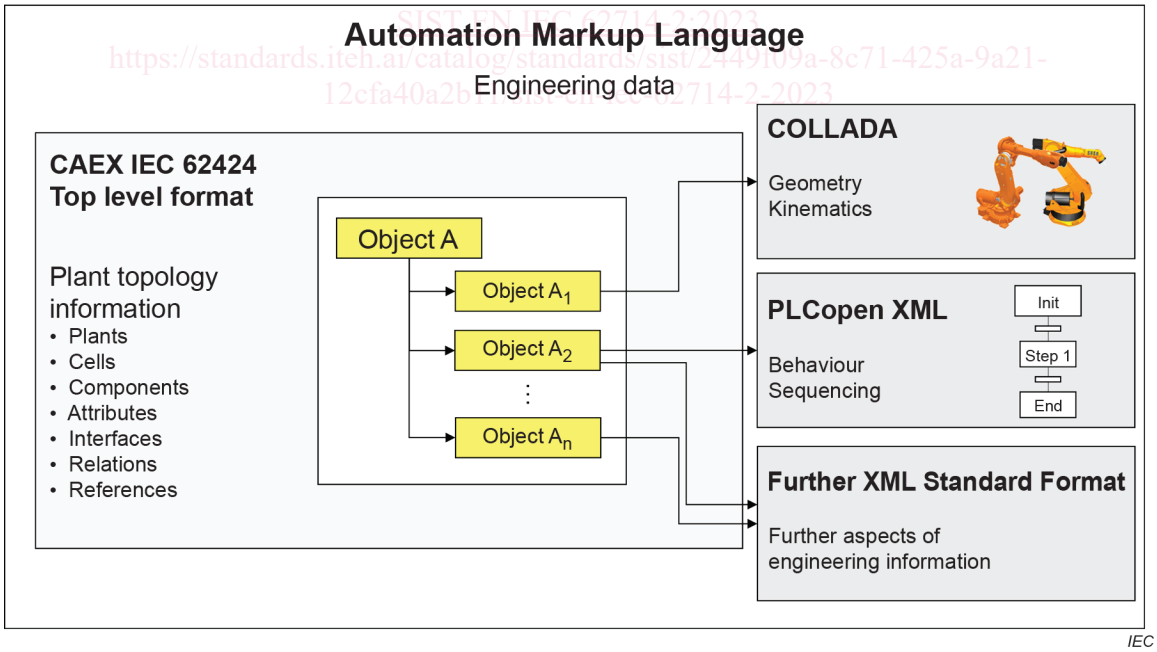

Figure 1 – Overview of the engineering data exchange format (AML)