FINAL DRAFT

INTERNATIONAL STANDARD

ISO/FDIS 4016

ISO/TC **2**/SC **11**

Secretariat: DIN

Voting begins on:
2021-06-29

Voting terminates on:
2021-08-24

Fasteners — Hexagon head bolts — Product grade C

Fixations — Vis à tête hexagonale partiellement filetées — Grade C

ISO/CEN PARALLEL PROCESSING

Reference number
ISO/FDIS 4016:2021(E)

ISO copyright office
CP 401 • Ch. de Blandonnet 8
CH-1214 Vernier, Geneva
Phone: +41 22 749 01 11
Email: copyright@iso.org
Website: www.iso.org

Published in Switzerland

Contents

Page

Foreword

ISO (the International Organization for Standardization) is a worldwide federation of national standards bodies (ISO member bodies). The work of preparing International Standards is normally carried out through ISO technical committees. Each member body interested in a subject for which a technical committee has been established has the right to be represented on that committee. International organizations, governmental and non-governmental, in liaison with ISO, also take part in the work. ISO collaborates closely with the International Electrotechnical Commission (IEC) on all matters of electrotechnical standardization.

The procedures used to develop this document and those intended for its further maintenance are described in the ISO/IEC Directives, Part 1. In particular, the different approval criteria needed for the different types of ISO documents should be noted. This document was drafted in accordance with the editorial rules of the ISO/IEC Directives, Part 2 (see www.iso.org/directives).

Attention is drawn to the possibility that some of the elements of this document may be the subject of patent rights. ISO shall not be held responsible for identifying any or all such patent rights. Details of any patent rights identified during the development of the document will be in the Introduction and/or on the ISO list of patent declarations received (see www.iso.org/patents).

Any trade name used in this document is information given for the convenience of users and does not constitute an endorsement.

For an explanation of the voluntary nature of standards, the meaning of ISO specific terms and expressions related to conformity assessment, as well as information about ISO's adherence to the World Trade Organization (WTO) principles in the Technical Barriers to Trade (TBT), see www.iso.org/iso/foreword.html.

This document was prepared by Technical Committee ISO/TC 2, *Fasteners*, Subcommittee SC 11, *Fasteners with metric external thread*, in collaboration with the European Committee for Standardization (CEN) Technical Committee CEN/TC 185, *Fasteners*, in accordance with the Agreement on technical cooperation between ISO and CEN (Vienna Agreement).

This fifth edition cancels and replaces the fourth edition (ISO 4016:2011), which has been technically revised.

The main changes compared to the previous edition are as follows:

— the permissible shapes for free formed head, indentation on the head, and transition length under head, l_f, have been added;

— tables for dimensions have been restructured;

— M7 has been added;

— $d_{w,min}$ has been changed for M5 from s_{min} – IT16 to s_{min} – IT15 (as for hexagon head bolts of product grades A and B) in order to have a larger bearing surface area and thus less contact pressure;

— the rules for the shortest and greatest standard lengths have been added, and they have been amended accordingly;

— $l_{g,max}$ has been corrected for M33 × 260 (169 mm instead of 167 mm);

— specifications for marking and labelling have been added as Clause 6.

Any feedback or questions on this document should be directed to the user's national standards body. A complete listing of these bodies can be found at www.iso.org/members.html.

Fasteners — Hexagon head bolts — Product grade C

1 Scope

This document specifies the characteristics of hexagon head bolts, in steel, with metric coarse pitch threads M5 to M64, and with product grade C.

NOTE If in certain cases other specifications are requested, property classes can be selected from ISO 898-1 and dimensional options from ISO 888 or ISO 4753.

2 Normative references

The following documents are referred to in the text in such a way that some or all of their content constitutes requirements of this document. For dated references, only the edition cited applies. For undated references, the latest edition of the referenced document (including any amendments) applies.

ISO 225, *Fasteners — Bolts, screws, studs and nuts — Symbols and descriptions of dimensions*

ISO 888, *Fasteners — Bolts, screws and studs — Nominal lengths and thread lengths*

ISO 898-1, *Mechanical properties of fasteners made of carbon steel and alloy steel — Part 1: Bolts, screws and studs with specified property classes — Coarse thread and fine pitch thread*

ISO 965-1, *ISO general purpose metric screw threads — Tolerances — Part 1: Principles and basic data*

ISO 1891-4, *Fasteners — Vocabulary — Part 4: Control, inspection, delivery, acceptance and quality*

ISO 3269, *Fasteners — Acceptance inspection*

ISO 4042, *Fasteners — Electroplated coating systems*

ISO 4753, *Fasteners — Ends of parts with external ISO metric thread*

ISO 4759-1, *Tolerances for fasteners — Part 1: Bolts, screws, studs and nuts — Product grades A, B and C*

ISO 6157-1, *Fasteners — Surface discontinuities — Part 1: Bolts, screws and studs for general requirements*

ISO 8991, *Designation system for fasteners*

ISO 8992, *Fasteners — General requirements for bolts, screws, studs and nuts*

ISO 10683, *Fasteners — Non-electrolytically applied zinc flake coating systems*

ISO 10684, *Fasteners — Hot dip galvanized coatings*

3 Terms and definitions

No terms and definitions are listed in this document.

ISO and IEC maintain terminological databases for use in standardization at the following addresses:

— ISO Online browsing platform: available at https://www.iso.org/obp

— IEC Electropedia: available at https://www.electropedia.org/

4 Dimensions

Dimensions shall be in accordance with Figures 1 and 2 and with Tables 1 to 4.

Symbols and descriptions of dimensions are defined in ISO 225.

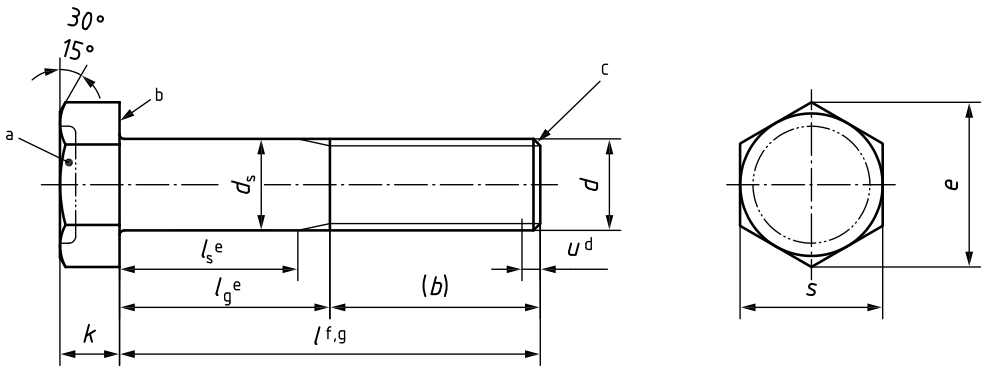

a Indentation at the discretion of the manufacturer, in accordance with Figure 2.

b Washer-face at the discretion of the manufacturer, in accordance with Figure 2.

c End at the discretion of the manufacturer, in accordance with ISO 4753.

d Incomplete thread $u \leq 2P$.

e $l_{g,max} = l_{nom} - b$ and $l_{s,min} = l_{g,max} - 5P$.

f Shortest standard length l_{nom} determined with $5d$ for M5 to M8, $4{,}5d$ for M10, $4d$ for M12 to M22, $3{,}75d$ for M24 to M60, and rounded (if necessary) to the nearest standard length; shortest standard length l_{nom} = 220 mm for M64.

g Greatest standard length $l_{nom} \leq 10d$ or 500 mm, whichever is the shorter.

Figure 1 — Hexagon head bolt

Dimensions in millimetres

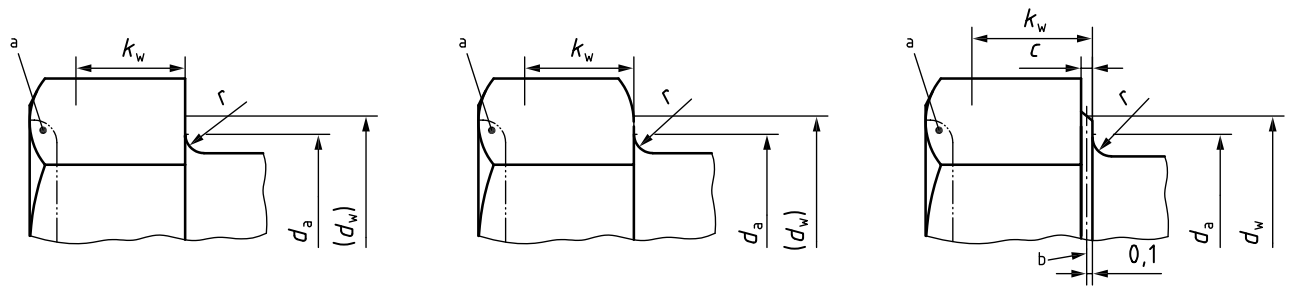

a) Permissible shapes

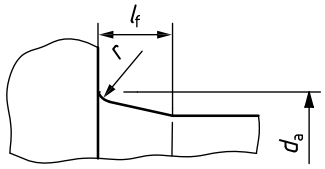

b) Optional underhead junction

a Any shape for the optional indentation within a maximum diameter of $0{,}8s$ and a maximum depth of $0{,}2k$.

b Reference datum for d_w.

Figure 2 — Head details

Table 1 — Dimensions – M5 to M12

Dimensions in millimetres

Thread, d			M5	M6	(M7)	M8	M10	M12
P [a]			0,8	1	1	1,25	1,5	1,75
b	ref.	b	16	18	20	22	26	30
c		max.	0,5	0,5	0,6	0,6	0,6	0,6
d_a		max.	6,0	7,2	8,2	10,2	12,2	14,7
d_s		max.	5,48	6,48	7,58	8,58	10,58	12,7
		min.	4,52	5,52	6,42	7,42	9,42	11,3
d_w		min.	7,06	8,74	9,47	11,47	14,47	16,47
e		min.	8,63	10,89	11,94	14,20	17,59	19,85
k		nom.	3,5	4,0	4,8	5,3	6,4	7,5
		max.	3,875	4,375	5,175	5,675	6,85	7,95
		min.	3,125	3,625	4,425	4,925	5,95	7,05
k_w		min.	2,19	2,54	3,10	3,45	4,17	4,94
l_f		max.	1,2	1,4	1,4	2,0	2,0	3,0
r		min.	0,20	0,25	0,25	0,40	0,40	0,60
s	nom. =	max.	8,00	10,00	11,00	13,00	16,00	18,00
		min.	7,64	9,64	10,57	12,57	15,57	17,57

l			Range of standard lengths between the stepped bold lines											
nom.	min.	max.	l_s min.	l_g max.	l_s min.	l_g max.	l_s min.	l_g max.	l_s min.	l_g max.	l_s min.	l_g max.	l_s min.	l_g max.
25	23,95	26,05	5,0	9,0										
30	28,95	31,05	10,0	14,0	7,0	12,0								
35	33,75	36,25	15,0	19,0	12,0	17,0	10,0	15,0						
40	38,75	41,25	20,0	24,0	17,0	22,0	15,0	20,0	11,75	18,0				
45	43,75	46,25	25,0	29,0	22,0	27,0	20,0	25,0	16,75	23,0	11,5	19,0		
50	48,75	51,25	30,0	34,0	27,0	32,0	25,0	30,0	21,75	28,0	16,5	24,0	11,25	20,0
55	53,50	56,50			32,0	37,0	30,0	35,0	26,75	33,0	21,5	29,0	16,25	25,0
60	58,50	61,50			37,0	42,0	35,0	40,0	31,75	38,0	26,5	34,0	21,25	30,0
65	63,50	66,50					40,0	45,0	36,75	43,0	31,5	39,0	26,25	35,0
70	68,50	71,50					45,0	50,0	41,75	48,0	36,5	44,0	31,25	40,0
80	78,50	81,50							51,75	58,0	46,5	54,0	41,25	50,0
90	88,25	91,75									56,5	64,0	51,25	60,0
100	98,25	101,75									66,5	74,0	61,25	70,0
110	108,25	111,75											71,25	80,0
120	118,25	121,75											81,25	90,0
—	—	—												

Fully threaded screws specified in ISO 4018

Lengths to be agreed between the purchaser and the manufacturer in accordance with ISO 888

NOTE Size shown in brackets is a non-preferred diameter.

[a] P is the pitch of the thread.

[b] For $l_{nom} \leq 125$ mm.

Table 2 — Dimensions – M14 to M24

Dimensions in millimetres

Thread, d			(M14)	**M16**	(M18)	**M20**	(M22)	**M24**
P [a]			2	2	2,5	2,5	2,5	3
b	ref.	b	34	38	42	46	50	54
		c	40	44	48	52	56	60
		d	—	—	—	—	69	73
c		max.	0,6	0,8	0,8	0,8	0,8	0,8
d_a		max.	16,7	18,7	21,2	24,4	26,4	28,4
d_s		max.	14,70	16,70	18,70	20,84	22,84	24,84
		min.	13,30	15,30	17,30	19,16	21,16	23,16
d_w		min.	19,15	22,00	24,85	27,70	31,35	33,25
e		min.	22,78	26,17	29,56	32,95	37,29	39,55
k		nom.	8,8	10	11,5	12,5	14	15
		max.	9,25	10,75	12,4	13,4	14,9	15,9
		min.	8,35	9,25	10,6	11,6	13,1	14,1
k_w		min.	5,85	6,48	7,42	8,12	9,17	9,87
l_f		max.	3	3	3	4	4	4
r		min.	0,6	0,6	0,6	0,8	0,8	0,8
s	nom. =	max.	21,00	24,00	27,00	30,00	34,00	36,00
		min.	20,16	23,16	26,16	29,16	33,00	35,00

l			Range of standard lengths between the stepped bold lines											
nom.	min.	max.	l_s min.	l_g max.	l_s min.	l_g max.	l_s min.	l_g max.	l_s min.	l_g max.	l_s min.	l_g max.	l_s min.	l_g max.
55	53,5	56,5	11,0	21,0										
60	58,5	61,5	16,0	26,0										
65	63,5	66,5	21,0	31,0	17,0	27,0								
70	68,5	71,5	26,0	36,0	22,0	32,0	15,5	28,0						
80	78,5	81,5	36,0	46,0	32,0	42,0	25,5	38,0	21,5	34,0				
90	88,25	91,75	46,0	56,0	42,0	52,0	35,5	48,0	31,5	44,0	27,5	40,0	21,0	36,0
100	98,25	101,75	56,0	66,0	52,0	62,0	45,5	58,0	41,5	54,0	37,5	50,0	31,0	46,0
110	108,25	111,75	66,0	76,0	62,0	72,0	55,5	68,0	51,5	64,0	47,5	60,0	41,0	56,0
120	118,25	121,75	76,0	86,0	72,0	82,0	65,5	78,0	61,5	74,0	57,5	70,0	51,0	66,0
130	128,0	132,0	80,0	90,0	76,0	86,0	69,5	82,0	65,5	78,0	61,5	74,0	55,0	70,0
140	138,0	142,0	90,0	100	86,0	96,0	79,5	92,0	75,5	88,0	71,5	84,0	65,0	80,0
150	148,0	152,0			96,0	106	89,5	102	85,5	98,0	81,5	94,0	75,0	90,0
160	156,0	164,0			106	116	99,5	112	95,5	108	91,5	104	85,0	100
180	176,0	184,0					119,5	132	115,5	128	111,5	124	105	120
200	195,4	204,6							135,5	148	131,5	144	125	140
220	215,4	224,6									138,5	151	132	147
240	235,4	244,6											152	167
—	—	—												

Fully threaded screws specified in ISO 4018

Lengths to be agreed between the purchaser and the manufacturer in accordance with ISO 888

NOTE Sizes shown in brackets are non-preferred diameters.

[a] P is the pitch of the thread.

[b] For $l_{nom} \leq 125$ mm.

[c] For 125 mm < $l_{nom} \leq 200$ mm.

[d] For $l_{nom} > 200$ mm.

Table 3 — Dimensions – M27 to M42

Dimensions in millimetres

Thread, d			(M27)	**M30**	(M33)	**M36**	(M39)	**M42**
P [a]			3	3,5	3,5	4	4	4,5
b	ref.	b	60	66	72	—	—	—
		c	66	72	78	84	90	96
		d	79	85	91	97	103	109
c		max.	0,8	0,8	0,8	0,8	1,0	1,0
d_a		max.	32,4	35,4	38,4	42,4	45,4	48,6
d_s		max.	27,84	30,84	34,0	37,0	40,0	43,0
		min.	26,16	29,16	32,0	35,0	38,0	41,0
d_w		min.	38,00	42,75	46,55	51,11	55,86	59,95
e		min.	45,20	50,85	55,37	60,79	66,44	71,30
k		nom.	17	18,7	21	22,5	25	26
		max.	17,90	19,75	22,05	23,55	26,05	27,05
		min.	16,10	17,65	19,95	21,45	23,95	24,95
k_w		min.	11,27	12,36	13,97	15,02	16,77	17,47
l_f		max.	6	6	6	6	6	8
r		min.	1,0	1,0	1,0	1,0	1,0	1,2
s	nom. =	max.	41,0	46,0	50,0	55,0	60,0	65,0
		min.	40,0	45,0	49,0	53,8	58,8	63,1

l			Range of standard lengths between the stepped bold lines											
nom.	min.	max.	l_s min.	l_g max.	l_s min.	l_g max.	l_s min.	l_g max.	l_s min.	l_g max.	l_s min.	l_g max.	l_s min.	l_g max.
100	98,25	101,75	25,0	40,0										
110	108,25	111,75	35,0	50,0	26,5	44,0								
120	118,25	121,75	45,0	60,0	36,5	54,0	30,5	48,0						
130	128,0	132,0	49,0	64,0	40,5	58,0	34,5	52,0						
140	138,0	142,0	59,0	74,0	50,5	68,0	44,5	62,0	36,0	56,0				
150	148,0	152,0	69,0	84,0	60,5	78,0	54,5	72,0	46,0	66,0	40,0	60,0		
160	156,0	164,0	79,0	94,0	70,5	88,0	64,5	82,0	56,0	76,0	50,0	70,0	41,5	64,0
180	176,0	184,0	99,0	114	90,5	108	84,5	102	76,0	96,0	70,0	90,0	61,5	84,0
200	195,4	204,6	119	134	110,5	128	104,5	122	96,0	116	90,0	110	81,5	104
220	215,4	224,6	126	141	117,5	135	111,5	129	103	123	97,0	117	88,5	111
240	235,4	244,6	146	161	137,5	155	131,5	149	123	143	117	137	108,5	131
260	254,8	265,2	166	181	157,5	175	151,5	169	143	163	137	157	128,5	151
280	274,8	285,2			177,5	195	171,5	189	163	183	157	177	148,5	171
300	294,8	305,2			197,5	215	191,5	209	183	203	177	197	168,5	191
320	314,3	325,7					211,5	229	203	223	197	217	188,5	211
340	334,3	345,7							223	243	217	237	208,5	231
360	354,3	365,7							243	263	237	257	228,5	251
380	374,3	385,7									257	277	248,5	271
400	394,3	405,7											268,5	291
420	413,7	426,3											288,5	311
—	—	—												

Fully threaded screws specified in ISO 4018

Lengths to be agreed between the purchaser and the manufacturer in accordance with ISO 888

NOTE Sizes shown in brackets are non-preferred diameters.

[a] P is the pitch of the thread.

[b] For $l_{nom} \leq 125$ mm.

[c] For 125 mm < $l_{nom} \leq 200$ mm.

[d] For $l_{nom} > 200$ mm.

Table 4 — Dimensions – M45 to M64

Dimensions in millimetres

Thread, *d*			(M45)	**M48**			(M52)		**M56**		(M60)		**M64**	
P [a]			4,5	5			5		5,5		5,5		6	
b	ref.	b	102	108			116		—		—		—	
		c	115	121			129		137		145		153	
c		max.	1,0	1,0			1,0		1,0		1,0		1,0	
d_a		max.	52,6	56,6			62,6		67,0		71,0		75,0	
d_s		max.	46,0	49,0			53,2		57,2		61,2		65,2	
		min.	44,0	47,0			50,8		54,8		58,8		62,8	
d_w		min.	64,70	69,45			74,20		78,66		83,41		88,16	
e		min.	76,95	82,60			88,25		93,56		99,21		104,86	
k		nom.	28	30			33		35		38		40	
		max.	29,05	31,05			34,25		36,25		39,25		41,25	
		min.	26,95	28,95			31,75		33,75		36,75		38,75	
k_w		min.	18,87	20,27			22,23		23,63		25,73		27,13	
l_f		max.	8	10			10		12		12		13	
r		min.	1,2	1,6			1,6		2,0		2,0		2,0	
s	nom. =	max.	70,0	75,0			80,0		85,0		90,0		95,0	
		min.	68,1	73,1			78,1		82,8		87,8		92,8	
l			**Range of standard lengths between the stepped bold lines**											
nom.	min.	max.	l_s min.	l_g max.	l_s min.	l_g max.	l_s min.	l_g max.	l_s min.	l_g max.	l_s min.	l_g max.	l_s min.	l_g max.
160	156,0	164,0	35,5	58										
180	176,0	184,0	55,5	78	47	72								
200	195,4	204,6	75,5	98	67	92	59	84						
220	215,4	224,6	82,5	105	74	99	66	91	55,5	83	47,5	75	37	67
240	235,4	244,6	102,5	125	94	119	86	111	75,5	103	67,5	95	57	87
260	254,8	265,2	122,5	145	114	139	106	131	95,5	123	87,5	115	77	107
280	274,8	285,2	142,5	165	134	159	126	151	115,5	143	107,5	135	97	127
300	294,8	305,2	162,5	185	154	179	146	171	135,5	163	127,5	155	117	147
320	314,3	325,7	182,5	205	174	199	166	191	155,5	183	147,5	175	137	167
340	334,3	345,7	202,5	225	194	219	186	211	175,5	203	167,5	195	157	187
360	354,3	365,7	222,5	245	214	239	206	231	195,5	223	187,5	215	177	207
380	374,3	385,7	242,5	265	234	259	226	251	215,5	243	207,5	235	197	227
400	394,3	405,7	262,5	285	254	279	246	271	235,5	263	227,5	255	217	247
420	413,7	426,3	282,5	305	274	299	266	291	255,5	283	247,5	275	237	267
440	433,7	446,3	302,5	325	294	319	286	311	275,5	303	267,5	295	257	287
460	453,7	466,3			314	339	306	331	295,5	323	287,5	315	277	307
480	473,7	486,3			334	359	326	351	315,5	343	307,5	335	297	327
500	493,7	506,3					346	371	335,5	363	327,5	355	317	347
—	—	—												

Fully threaded screws specified in ISO 4018

Lengths to be agreed between the purchaser and the manufacturer in accordance with ISO 888

NOTE Sizes shown in brackets are non-preferred diameters.

[a] *P* is the pitch of the thread.

[b] For 125 mm < l_{nom} ≤ 200 mm.

[c] For l_{nom} > 200 mm.