INTERNATIONAL STANDARD

ISO 6238

Third edition
2018-08

Adhesives — Wood-to-wood adhesive bonds — Determination of shear strength by compressive loading

Adhésifs — Joints collés de bois à bois — Détermination de la résistance au cisaillement par effort de compression

Reference number
ISO 6238:2018(E)

ISO copyright office
CP 401 • Ch. de Blandonnet 8
CH-1214 Vernier, Geneva
Phone: +41 22 749 01 11
Fax: +41 22 749 09 47
Email: copyright@iso.org
Website: www.iso.org

Published in Switzerland

Contents

Page

Foreword

ISO (the International Organization for Standardization) is a worldwide federation of national standards bodies (ISO member bodies). The work of preparing International Standards is normally carried out through ISO technical committees. Each member body interested in a subject for which a technical committee has been established has the right to be represented on that committee. International organizations, governmental and non-governmental, in liaison with ISO, also take part in the work. ISO collaborates closely with the International Electrotechnical Commission (IEC) on all matters of electrotechnical standardization.

The procedures used to develop this document and those intended for its further maintenance are described in the ISO/IEC Directives, Part 1. In particular the different approval criteria needed for the different types of ISO documents should be noted. This document was drafted in accordance with the editorial rules of the ISO/IEC Directives, Part 2 (see www.iso.org/directives).

Attention is drawn to the possibility that some of the elements of this document may be the subject of patent rights. ISO shall not be held responsible for identifying any or all such patent rights. Details of any patent rights identified during the development of the document will be in the Introduction and/or on the ISO list of patent declarations received (see www.iso.org/patents).

Any trade name used in this document is information given for the convenience of users and does not constitute an endorsement.

For an explanation on the voluntary nature of standards, the meaning of ISO specific terms and expressions related to conformity assessment, as well as information about ISO's adherence to the World Trade Organization (WTO) principles in the Technical Barriers to Trade (TBT) see the following URL: www.iso.org/iso/foreword.html.

This document was prepared by Technical Committee ISO/TC 61, *Plastics,* Subcommittee SC 11, *Products.*

This third edition cancels and replaces the second edition (ISO 6238:2001), of which it constitutes a minor revision.

The changes compared to the previous edition are as follows:

— the references in Clause 2 have been updated;

— Clause 3 has been inserted and subsequent clauses have been renumbered;

— the document has been editorially revised.

Any feedback or questions on this document should be directed to the user's national standards body. A complete listing of these bodies can be found at www.iso.org/members.html.

Adhesives — Wood-to-wood adhesive bonds — Determination of shear strength by compressive loading

1 Scope

This document specifies a method for determining the shear strength of wood-to-wood adhesive bonds, with a standard specimen loaded in compression and under specified conditions of preparation, conditioning and testing. This method is intended for testing only those adhesives used in bonding wood to wood.

This method is not intended for use in testing manufactured products.

2 Normative references

The following documents are referred to in the text in such a way that some or all of their content constitutes requirements of this document. For dated references, only the edition cited applies. For undated references, the latest edition of the referenced document (including any amendments) applies.

ISO 291, *Plastics — Standard atmospheres for conditioning and testing*

ISO 7500, *Metallic materials — Verification of static uniaxial testing machines — Part 1: Tension/compression testing machines — Verification and calibration of the force-measuring system*

3 Terms and definitions

No terms and definitions are listed in this document.

ISO and IEC maintain terminological databases for use in standardization at the following addresses:

— ISO Online browsing platform: available at https://www.iso.org/obp

— IEC Electropedia: available at http://www.electropedia.org/

4 Apparatus

4.1 Apparatus for preparation of adhesive

4.1.1 **Balance** and **other suitable equipment**, capable of measuring the proportions of the adhesive mix to within a tolerance of ±1 %.

4.1.2 **Mixing equipment**, to ensure homogeneous mixing of the constituents with minimum aeration of the adhesive (except foamed adhesive).

4.1.3 **Spreading equipment**, such as a **wire-wound bar**, **roller spreader**, **curtain coater** or **suitable hand applicators**, capable of spreading the adhesive uniformly within ±5 % of the desired spread.

4.1.4 **Equipment**, designed to exert the required pressure evenly over the whole bonded area within ±5 % of the desired value, for example a **press** or **clamps.** If necessary, **heated platens** capable of maintaining the prescribed temperature within ±2 °C during compression.

4.2 Apparatus for the determination

4.2.1 Analytical balance, capable of weighing to 0,000 1 g.

4.2.2 Linear measuring device, reading to 0,05 mm, e.g. vernier calipers or micrometer.

4.2.3 Tensile-testing machine, operating in the compression mode, capable of maintaining a pre-determined constant cross-head rate. The machine shall be capable of determining a maximum load. The measured strength shall be between 15 % and 85 % of the capacity of the machine. The machine shall permit the measurement and recording of the applied force with an accuracy of ±1 %. The testing machine shall be fitted with a shearing tool containing a self-alignment seat to ensure uniform lateral distribution of the force.

NOTE A shearing tool as shown in Figure 1 has been found satisfactory.

The equipment shall be calibrated regularly in accordance with ISO 7500-1.

It is recommended that the machine be autographic, giving a chart that can be read in terms of millimetres of cross-head movement as one coordinate and applied force as the other coordinate. It is also recommended that inertialess equipment be used.

Dimensions in millimetres

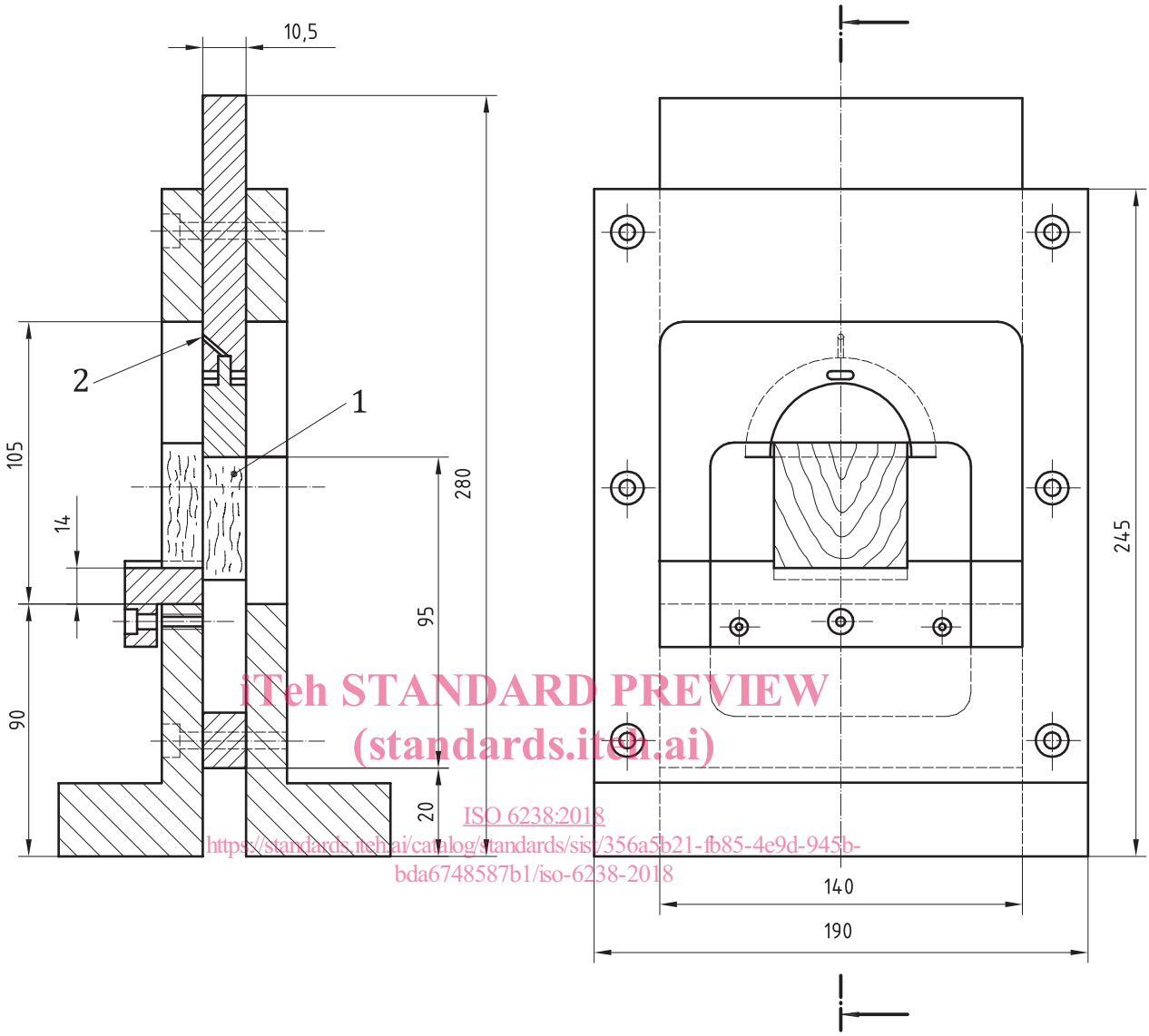

Key

1 test specimen

2 oil hole

Figure 1 — Example of shearing tool for compressive shear testing of specimen A

5 Test specimens

5.1 The timber species, timber quality and timber moisture content for the specimens shall be as described in Annex B.

5.2 Individual test joints shall comply with the form and dimensions shown in Figure 2. The individual test joints shall be cut from bonded blocks prepared as described in Clauses 6 and 7.

L and *W* represent the length and the width of the bonded area. The user shall select either the geometry of specimen A (bonded area 40 mm × 50 mm) or the geometry of specimen B (bonded area 25 mm × 25 mm). *T* represents the thickness, which is 20 mm for specimen A and 10 mm for specimen B.

In cases of dispute, only specimen A shall be used.

5.3 For adhesive quality control purposes, test a minimum of three test joints from each of three different bonded blocks, prepared as described in Clauses 6 and 7.

5.4 Where greater precision is required, test a minimum of five test joints from each of four different bonded blocks.

Dimensions in millimetres

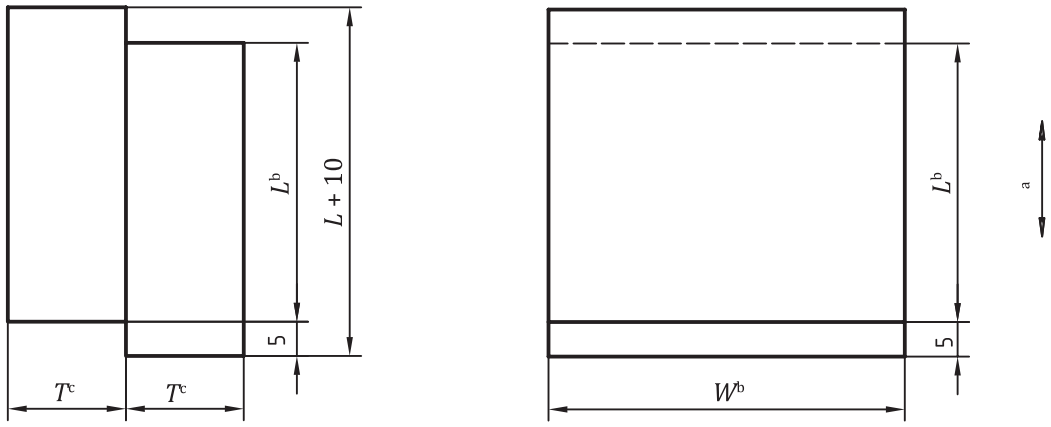

a Direction of grain.

b L and W = 40 mm × 50 mm for specimen A or 25 mm × 25 mm for specimen B.

c T = 20 mm for specimen A or 10 mm for specimen B.

Figure 2 — Shape and dimensions of test specimen

6 Preparation of test blocks

6.1 Blocks shall be cut from the timber, preferably of a size such that five test joints may be cut from one bonded block as shown in Figure 3. The grain direction shall be parallel to the longest dimension of the block. The blocks shall have surfaces substantially free from saw marks. The blocks shall be weighed and assembled in pairs so that blocks of approximately the same relative density are bonded together. The test blocks shall be knife-planed to ensure the bonding faces are flat, smooth and parallel to the surface where pressure will be applied; they shall be free from dirt, dust or other contamination. Unless otherwise agreed between the interested parties, the thickness of each of the blocks shall not vary by more than 0,1 mm to ensure even pressure during cure.

6.2 Prepare and apply the adhesive to the blocks in accordance with the procedure recommended by the manufacturer of the adhesive. Assemble and compress the coated blocks, also in accordance with the recommendations of the manufacturer of the adhesive. Number each bonded block. The net mass of the adhesive applied may be verified by weighing the blocks before and after spreading the adhesive.

Dimensions in millimetres

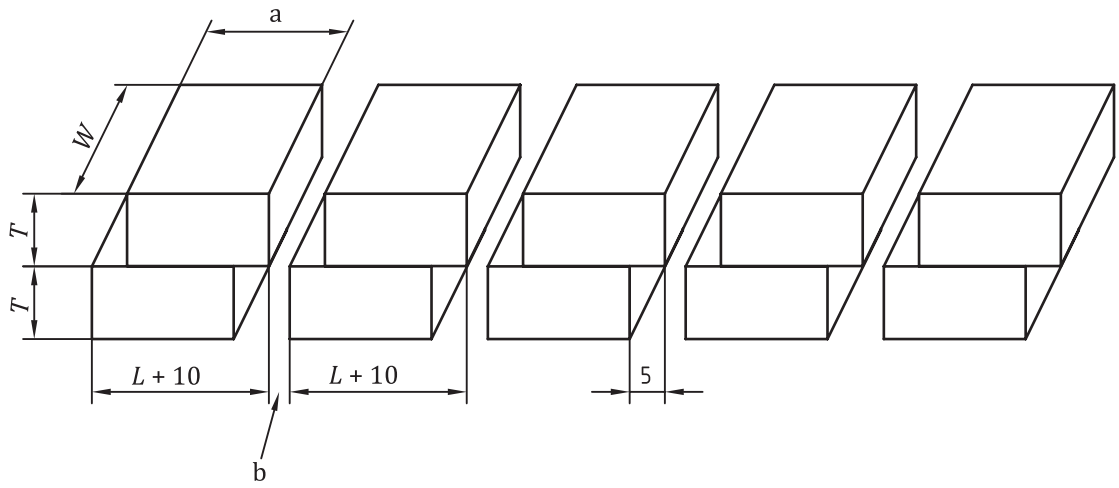

a Direction of grain.

b Saw kerf.

Figure 3 — Method of cutting test specimens from bonded blocks

7 Conditioning of test blocks

Upon release of pressure, condition the bonded blocks at a relative humidity of (50 ± 5) % and a temperature of (23 ± 2) °C, either for a period of 7 days or until they attain a constant mass, whichever is the longer period. (Constant mass is considered to be reached when the results of two successive weighing operations, carried out at an interval of 6 h, do not differ by more than 0,1 % of the mass of the bonded block.)

Conditioning may be extended beyond this limit by agreement between the interested parties.

NOTE Other conditions of humidity and temperature can be used by agreement between the interested parties.

The blocks shall be conditioned in accordance with ISO 291.

8 Preparation of test joints

8.1 Reduce the width of the test blocks to (L ± 0,5) mm by planing or sawing an approximately equal amount from each side. Before cutting off the test joints, cut approximately 10 mm from each end, then cut off the individual test joints as shown in Figure 3. When preparing the test specimens, make sure that the loaded surfaces are smooth and parallel to each other and perpendicular to the height. While reducing the lengths of the overlap to (W ± 0,5) mm, ensure that the saw cuts extend to, but not beyond, the bondline. Also ensure that the saw cuts are perpendicular to the major axis.

Number each test joint consecutively from one end of the bonded block to the other.

8.2 Store the test joints in the conditioning atmosphere described in Clause 7, until tested. The bonded blocks may be briefly removed for the cutting operations.