INTERNATIONAL STANDARD

ISO 6622-1

Third edition
2021-08

Internal combustion engines — Piston rings —

Part 1: Rectangular rings made of cast iron

Moteurs à combustion interne — Segments de piston —

Partie 1: Segments rectangulaires en fonte moulée

iTeh STANDARD PREVIEW
(standards.iteh.ai)

ISO 6622-1:2021
https://standards.iteh.ai/catalog/standards/sist/df2ead2a-afc5-4c50-b604-be26ea3f96d1/iso-6622-1-2021

Reference number
ISO 6622-1:2021(E)

© ISO 2021

iTeh STANDARD PREVIEW
(standards.iteh.ai)

ISO 6622-1:2021
https://standards.iteh.ai/catalog/standards/sist/df2ead2a-afc5-4c50-b604-be26ea3f96d1/iso-6622-1-2021

COPYRIGHT PROTECTED DOCUMENT

© ISO 2021

All rights reserved. Unless otherwise specified, or required in the context of its implementation, no part of this publication may be reproduced or utilized otherwise in any form or by any means, electronic or mechanical, including photocopying, or posting on the internet or an intranet, without prior written permission. Permission can be requested from either ISO at the address below or ISO's member body in the country of the requester.

ISO copyright office
CP 401 • Ch. de Blandonnet 8
CH-1214 Vernier, Geneva
Phone: +41 22 749 01 11
Email: copyright@iso.org
Website: www.iso.org

Published in Switzerland

Contents

Page

Foreword ..... **iv**
Introduction ..... **v**
1 Scope **1**
2 Normative references **1**
3 Terms and definitions **1**
4 Overview **1**
5 Ring types and designation examples **1**
5.1 Overview 1
5.2 Type R — Straight faced rectangular ring 1
5.2.1 General features 1
5.2.2 Designation 2
5.3 Type B — Barrel faced rectangular ring 2
5.3.1 General features 2
5.3.2 Designation 3
5.4 Type BA — Asymmetrical barrel faced rectangular ring $h_1 \geq 1{,}2$ mm 4
5.4.1 General features 4
5.4.2 Designation 5
5.5 Type M — Taper faced rectangular ring 5
5.5.1 General features 5
5.5.2 Designation 6
6 Common features **6**
6.1 Face coating types 6
6.2 Face shape types 7
6.3 Piston ring twist features 7
6.3.1 Taper faced rectangular ring with partly cylindrical machined (LM) or lapped (LP) peripheral surface 9
6.4 Chamfered edges 9
6.5 Type R, B, BA and M rings (fully faced, semi-inlaid and inlaid) — Plating/coating thickness 11
6.6 Type R, B, BA, and M rings — Nitrided case depth 12
7 Force factors **12**
8 Dimensions **13**
Bibliography **26**

iTeh STANDARD PREVIEW
(standards.iteh.ai)
ISO 6622-1:2021
https://standards.iteh.ai/catalog/standards/sist/df2ead2a-afe5-4c50-b604-6e26ea5b0d1/iso-6622-1-2021

© ISO 2021 – All rights reserved

Foreword

ISO (the International Organization for Standardization) is a worldwide federation of national standards bodies (ISO member bodies). The work of preparing International Standards is normally carried out through ISO technical committees. Each member body interested in a subject for which a technical committee has been established has the right to be represented on that committee. International organizations, governmental and non-governmental, in liaison with ISO, also take part in the work. ISO collaborates closely with the International Electrotechnical Commission (IEC) on all matters of electrotechnical standardization.

The procedures used to develop this document and those intended for its further maintenance are described in the ISO/IEC Directives, Part 1. In particular, the different approval criteria needed for the different types of ISO documents should be noted. This document was drafted in accordance with the editorial rules of the ISO/IEC Directives, Part 2 (see www. iso. org/directives).

Attention is drawn to the possibility that some of the elements of this document may be the subject of patent rights. ISO shall not be held responsible for identifying any or all such patent rights. Details of any patent rights identified during the development of the document will be in the Introduction and/or on the ISO list of patent declarations received (see www. iso. org/patents).

Any trade name used in this document is information given for the convenience of users and does not constitute an endorsement.

For an explanation of the voluntary nature of standards, the meaning of ISO specific terms and expressions related to conformity assessment, as well as information about ISO's adherence to the World Trade Organization (WTO) principles in the Technical Barriers to Trade (TBT), see www. iso. org/iso/foreword. html.

iTeh STANDARD PREVIEW
(standards.iteh.ai)

This document was prepared by Technical Committee ISO/TC *22*, *Road vehicles*, Subcommittee SC 34, *Propulsion, powertrain and powertrain fluids*.

ISO 6622-1:2021
https://standards.iteh.ai/catalog/standards/sist/df2ead2a-afc5-4c50-b604-be26ed38f33a/iso-6622-1-2021

This third edition cancels and replaces the second edition (ISO 6622-1:2003), which has been technically revised.

The main changes compared to the previous edition are as follows:

— figures were updated for a better understanding;

— added M6 taper in Table 3;

— added h_{19} dimension in Table 5;

— editorial adaptations according to ISO directives.

A list of all parts in the ISO 6622 series can be found on the ISO website.

Any feedback or questions on this document should be directed to the user's national standards body. A complete listing of these bodies can be found at www.iso.org/members.html.

 © ISO 2021 – All rights reserved

Introduction

The ISO 6622 series is one of a number of series of International Standards dealing with piston rings for reciprocating internal combustion engines. Others are ISO 6621,[2],[3],[4] ISO 6623,[5] ISO 6624 [6],[7], [8] [9], ISO 6625,[10] ISO 6626 [11],[12] and ISO 6627 [13].

The common features and dimensional tables presented in this document constitute a broad range of variables and, in selecting a particular ring type, it is important for the designer to bear in mind the conditions under which it will be required to operate.

It is also important that the designer refers to the specifications and requirements of ISO 6621-3 [3] and ISO 6621-4 before completing selection.

iTeh STANDARD PREVIEW
(standards.iteh.ai)

ISO 6622-1:2021
https://standards.iteh.ai/catalog/standards/sist/df2ead2a-afc5-4c50-b604-be26ea3f96d1/iso-6622-1-2021

© ISO 2021 – All rights reserved

iTeh STANDARD PREVIEW
(standards.iteh.ai)

ISO 6622-1:2021
https://standards.iteh.ai/catalog/standards/sist/df2ead2a-afc5-4c50-b604-be26ea3f96d1/iso-6622-1-2021

Internal combustion engines — Piston rings —

Part 1: Rectangular rings made of cast iron

1 Scope

This document specifies the essential dimensional features of rectangular rings made of cast iron, Types R, B, BA and M, having diameters up to and including 200 mm, used in reciprocating internal combustion piston engines. It is also applicable to piston rings of compressors working under similar conditions.

2 Normative references

The following documents are referred to in the text in such a way that some or all of their content constitutes requirements of this document. For dated references, only the edition cited applies. For undated references, the latest edition of the referenced document (including any amendments) applies.

ISO 6621-1, *Internal combustion engines — Piston rings — Part 1: Vocabulary*

ISO 6621-4, *Internal combustion engines — Piston rings — Part 4: General specifications*

iTeh STANDARD PREVIEW
(standards.iteh.ai)
ISO 6622-1:2021
https://standards.iteh.ai/catalog/standards/sist/df2ead2a-afc5-4c50-b604-
6e26ea3f9d1f/iso-6622-1-2021

3 Terms and definitions

For the purposes of this document, the terms and definitions given in ISO 6621-1 apply.

ISO and IEC maintain terminological databases for use in standardization at the following addresses:

— ISO Online browsing platform: available at https://www.iso.org/obp

— IEC Electropedia: available at https://www.electropedia.org/

4 Overview

The rectangular ring types are specified in Tables 1 to 3 and Figures 1 to 4. Their common features and the dimensions of those features are specified in Tables 4 to 10 and Figures 5 to 13. Tables 11 and 12 give the force factors for the different ring types, while Tables 13 and 14 give the dimensions and forces of rectangular rings of radial wall thickness regular and thicker “D/22”, respectively.

5 Ring types and designation examples

5.1 Overview

The rectangular ring types are specified in Tables 1 to 3 and Figures 1 to 4.

5.2 Type R — Straight faced rectangular ring

5.2.1 General features

See Table 13 or 14 for dimensions and forces.

© ISO 2021 – All rights reserved

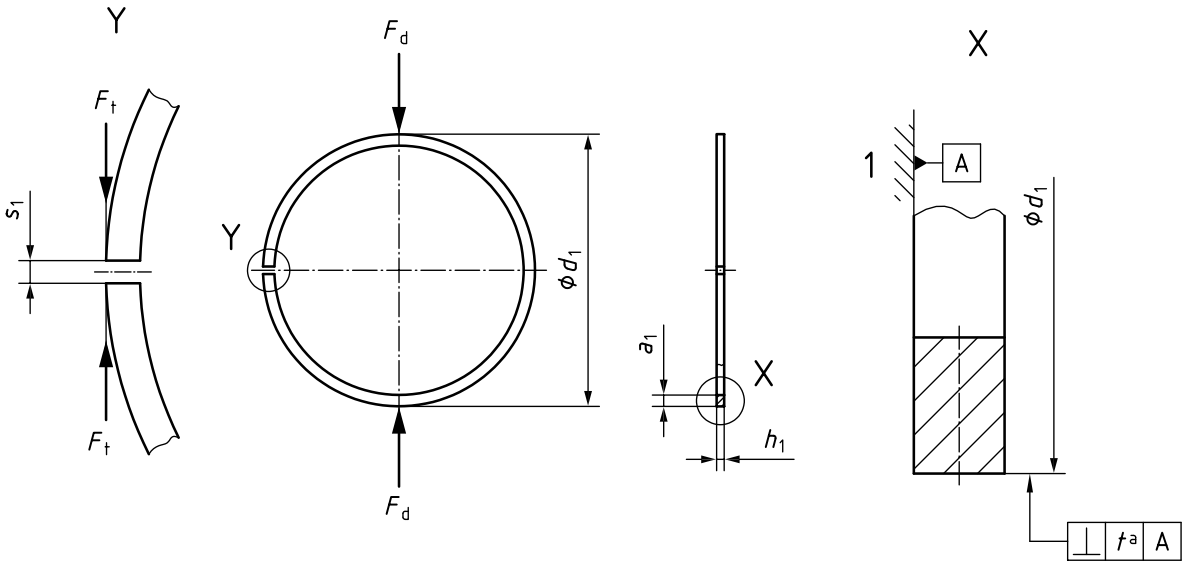

Key

1 reference plane

a $t = 0{,}005 \times h_1$.

Figure 1 — Type R

iTeh STANDARD PREVIEW
(standards.iteh.ai)

5.2.2 Designation

EXAMPLE Designation of a piston ring complying with the requirements of ISO 6622-1, being a rectangular ring made of cast iron, with a straight faced peripheral surface (R), of nominal diameter d_1 = 90 mm (90), of nominal ring width h_1 = 2,5 mm (2,5), made of non-heat treated grey cast iron, subclass 12 (MC12), phosphated on all sides (PO):

ISO 6622-1:2021
https://standards.iteh.ai/catalog/standards/sist/d2ced2aa-af5-4a50-b604-be26ea3f96d1/iso-6622-1-2021

Piston ring ISO 6622-1 R 90 × 2,5 - MC12/PO

5.3 Type B — Barrel faced rectangular ring

5.3.1 General features

See Table 13 or 14 for dimensions and forces.

 © ISO 2021 – All rights reserved

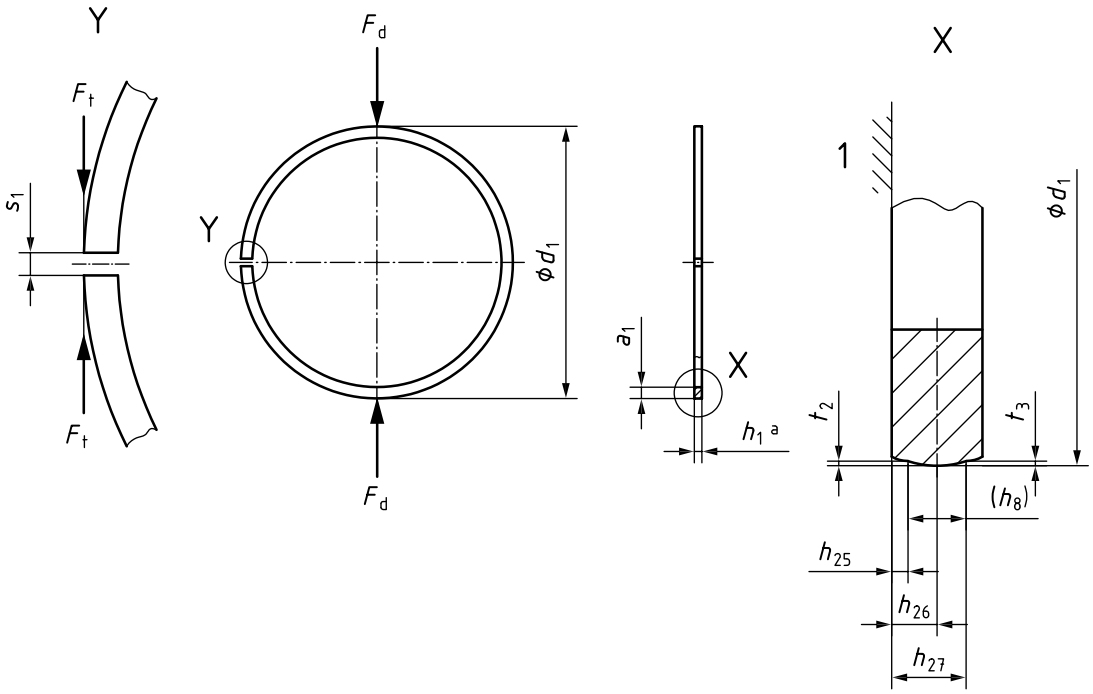

Key

1 reference plane

a See Table 1.

iTeh STANDARD PREVIEW
(standards.iteh.ai)

Figure 2 — Type B

ISO 6622-1:2021
https://standards.iteh.ai/catalog/standards/sist/df2ead2a-afc5-4c50-b604-be26ea3f96d1/iso-6622-1-2021

Table 1 — Gauge width (h_8) and barrel dimensions for symmetrical barrel faced compression rings

Dimensions in millimetres

h_1	h_{25}[a]	h_{26}	h_{26} tolerance	h_{27}	t_2, t_3[b]	h_8[c]
1,2	0,30	0,60	±0,20	0,90	0,002...0,012	0,60
1,5	0,35	0,75	±0,25	1,15	0,003...0,015	0,80
1,75	0,35	0,85	±0,30	1,35		1,00
2,0	0,40	1,00	±0,30	1,60		1,20
2,5	0,45	1,25	±0,40	2,05		1,60
3,0	0,50	1,50	±0,50	2,50	0,005...0,020	2,00
3,5	0,55	1,75	±0,50	2,95		2,40
4,0	0,60	2,00	±0,60	3,40	0,005...0,023	2,80
4,5	0,65	2,25	±0,60	3,85		3,20

a h_{25} may be lowered for rings with reduced edge dimensions.

b t_2 and/or t_3 can be changed as agreed between edge dimensions.

c Gauge width (h_8) only informative; may be used only if agreed between manufacturer and client.

5.3.2 Designation

EXAMPLE Designation of a piston ring complying with the requirements of ISO 6622-1, being a rectangular ring made of cast iron, with a barrel faced peripheral surface (B), of nominal diameter d_1 = 90 mm (90), of nominal width h_1 = 2,5 mm (2,5), made of heat-treated martensitic spheroidal graphite cast iron, subclass 51 (MC51), with a chromium plated coating on the peripheral surface, and of minimum thickness 0,15 mm (CR3):

Piston ring ISO 6622-1 - B 90 × 2,5 - MC51/CR3

© ISO 2021 – All rights reserved

5.4 Type BA — Asymmetrical barrel faced rectangular ring $h_1 \geq 1{,}2$ mm

5.4.1 General features

See Table 13 or 14 for dimensions and forces.

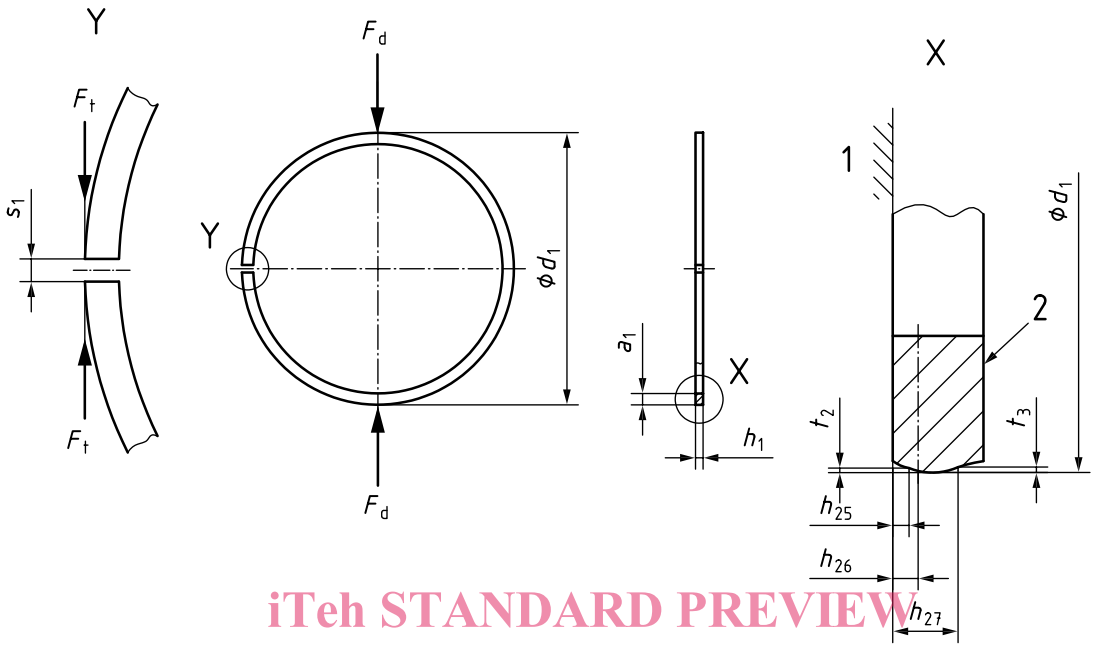

iTeh STANDARD PREVIEW
(standards.iteh.ai)

Key

1 reference plane

2 top side identification mark

ISO 6622-1:2021
https://standards.iteh.ai/catalog/standards/sist/df2ead2a-afc5-4c50-b604-be26ea3f96d1/iso-6622-1-2021

Figure 3 — Type BA

Table 2 — Asymmetrical barrel dimensions

Dimensions in millimetres

h_1	h_{25}[a]	h_{26}	h_{26} tolerance	h_{27}	t_2[b]	t_3[b]
1,2	0,20 [c] 0,28	0,35 0,43	±0,15	0,80 0,90	0...0,005	0,005...0,016
1,5	0,35	0,50	±0,15	1,15		0,007...0,022
1,75 2,0	0,35 0,40	0,55 0,60	±0,20	1,35 1,50	0...0,007	0,008...0,025 0,009...0,030
2,5 3,0	0,45 0,55	0,70 0,80	±0,25	1,80 2,10	0...0,008	0,011...0,035 0,012...0,038
3,5 4,0	0,60 0,65	0,90 0,95	±0,30	2,40 2,80	0...0,009	0,012...0,040 0,013... 0,045
4,5	0,70	1,05	±0,35	3,20	0...0,010	0,015... 0,050

[a] h_{25} may be lowered for rings with reduced edge dimensions.

[b] t_2 and/or t_3 may be varied as agreed between manufacturer and client.

[c] Recommended for bottom edge smaller than 0,2 mm.

© ISO 2021 – All rights reserved

5.4.2 Designation

EXAMPLE Designation of a piston ring complying with the requirements of ISO 6622-1, being a rectangular ring made of cast iron, with an asymmetrical barrel faced peripheral surface (BA), of nominal diameter d_1 = 90 mm (90), of nominal width h_1 = 2,5 mm (2,5), made of heat-treated martensitic spheroidal graphite cast iron subclass 51 (MC51), and having a chromium plated coating on the peripheral surface with a minimum thickness of 0,15 mm (CR3):

Piston ring ISO 6622-1 BA 90 × 2,5 - MC51/CR3

5.5 Type M — Taper faced rectangular ring

5.5.1 General features

See Table 13 or 14 for dimensions and forces.

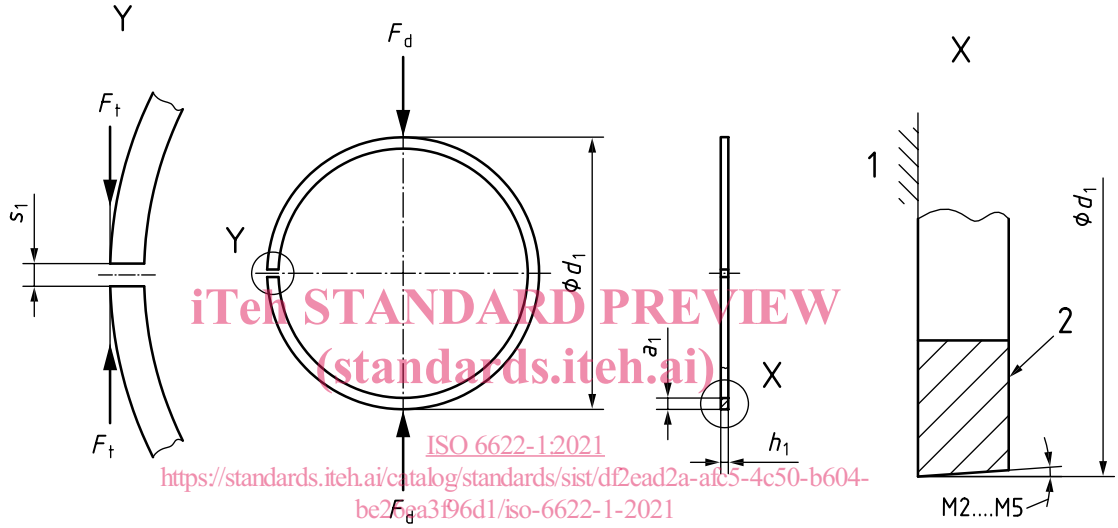

iTeh STANDARD PREVIEW
(standards.iteh.ai)
ISO 6622-1:2021
https://standards.iteh.ai/catalog/standards/sist/df2ead2a-afc5-4c50-b604-be2faa3f96d1/iso-6622-1-2021

Key

1 reference plane

2 top side identification mark

Figure 4 — Type M

© ISO 2021 – All rights reserved

Table 3 — Taper

Dimensions in minutes

Code	Uncoated rings with peripheral surface turned and chromium plated or spray coated rings with peripheral surface ground and chromium plated rings with surface not ground [a]					
	Taper	Tolerance	with IF or IW (top side)[b]		with IFU or IWU (bottom side) [b, c]	
			Taper	Tolerance	Taper	Tolerance [d]
M1[c]	10	$^{+40}_{0}$	10	$^{+60}_{0}$	—	—
M2	30	$^{+50}_{0}$	30		—	—
M3	60		60		60	$^{+60}_{0}$
M4	90		90		90	
M5	120		120		120	
M6	180		180		180	

[a] For chromium plated rings with tapered peripheral surface not ground, the tolerance shall be increased by 10 (e.g. M3 = 60: $^{+60}_{0}$ for M rings or $^{+70}_{0}$ for M rings (negative twist type) with IF and IW and IFU or IWU).

[b] IF and IW, and IFU and IWU, are explained in Figures 7 and 8.

[c] M1 should not be used for rings of width <1,5 mm or for those with a partly cylindrical peripheral surface.

[d] For M rings (negative twist type) M3, M4 and M5, the twist angle should not exceed 90 % of the minimum taper angle.

5.5.2 Designation

iTeh STANDARD PREVIEW
(standards.iteh.ai)

EXAMPLE Designation of a piston ring complying with the requirements of ISO 6622-1, being a rectangular ring made of cast iron, with a 10’ taper faced peripheral surface (M1), of diameter d_1 = 90 mm (90), of nominal width h_1 = 2,5 mm (2,5), made of heat treated grey cast iron, subclass 23 (MC23) and having an inlaid spray coating on the peripheral surface with a minimum thickness of 0,1 mm (SC2F):

Piston ring ISO 6622-1 M1 90 × 2,5 - MC23/SC2F

ISO 6622-1:2021
https://standards.iteh.ai/catalog/standards/sist/df2ead2a-afc5-4c50-b604-be26ea3f96d1/iso-6622-1-2021

6 Common features

6.1 Face coating types

Figure 5 shows the types of piston ring face coatings.

© ISO 2021 – All rights reserved