DRAFT INTERNATIONAL STANDARD

ISO/DIS 23450

ISO/TC **106**/SC **4**	Secretariat: **DIN**
Voting begins on: **2020-03-13**	Voting terminates on: **2020-06-05**

Dentistry — Intraoral camera

Médecine bucco-dentaire — Camera intraorale

ICS: 11.060.20

iTeh STANDARD PREVIEW
(standards.iteh.ai)
Full standard:
https://standards.iteh.ai/catalog/standards/sist/ddf1e92e-502b-4c89-93e6-6b0ff61d181c/iso-dis-23450

THIS DOCUMENT IS A DRAFT CIRCULATED FOR COMMENT AND APPROVAL. IT IS THEREFORE SUBJECT TO CHANGE AND MAY NOT BE REFERRED TO AS AN INTERNATIONAL STANDARD UNTIL PUBLISHED AS SUCH.

IN ADDITION TO THEIR EVALUATION AS BEING ACCEPTABLE FOR INDUSTRIAL, TECHNOLOGICAL, COMMERCIAL AND USER PURPOSES, DRAFT INTERNATIONAL STANDARDS MAY ON OCCASION HAVE TO BE CONSIDERED IN THE LIGHT OF THEIR POTENTIAL TO BECOME STANDARDS TO WHICH REFERENCE MAY BE MADE IN NATIONAL REGULATIONS.

RECIPIENTS OF THIS DRAFT ARE INVITED TO SUBMIT, WITH THEIR COMMENTS, NOTIFICATION OF ANY RELEVANT PATENT RIGHTS OF WHICH THEY ARE AWARE AND TO PROVIDE SUPPORTING DOCUMENTATION.

This document is circulated as received from the committee secretariat.

ISO/CEN PARALLEL PROCESSING

Reference number
ISO/DIS 23450:2020(E)

© ISO 2020

iTeh STANDARD PREVIEW
(standards.iteh.ai)
Full standard:
https://standards.iteh.ai/catalog/standards/sist/ddf1e92e-502b-4c89-93e6-6b0ff61d181c/iso-dis-23450



COPYRIGHT PROTECTED DOCUMENT

© ISO 2020

All rights reserved. Unless otherwise specified, or required in the context of its implementation, no part of this publication may be reproduced or utilized otherwise in any form or by any means, electronic or mechanical, including photocopying, or posting on the internet or an intranet, without prior written permission. Permission can be requested from either ISO at the address below or ISO's member body in the country of the requester.

ISO copyright office
CP 401 • Ch. de Blandonnet 8
CH-1214 Vernier, Geneva
Phone: +41 22 749 01 11
Fax: +41 22 749 09 47
Email: copyright@iso.org
Website: www.iso.org

Published in Switzerland

Contents

Page

Foreword ..... **v**
Introduction ..... **vi**
1 Scope **1**
2 Normative references **1**
3 Terms and definitions **2**
4 Classification **6**
5 Requirements **6**
5.1 General 6
5.2 Biocompatibility 6
5.3 Usability 6
5.4 Reprocessing 6
5.5 Protection from hazardous radiation 6
5.6 Image quality 7
5.6.1 Resolving power 7
5.6.2 Dynamic range 7
5.6.3 Illumination 7
5.6.4 Vignetting 7
5.6.5 Distortion 7
5.7 Optical characteristics 8
5.7.1 Angular field of view 8
5.7.2 Direction of view 9
5.7.3 Working range of the camera 9
5.7.4 Depth of field 9
5.8 Performance characteristics 9
5.8.1 Image resolution 9
5.8.2 Latency 9
5.8.3 Autofocus 9
5.8.4 Signal-to-noise ratio 9
5.8.5 Pixel error 10
5.8.6 Compression artefact formation 10
5.8.7 Frame Rate 10
5.9 Test report 10
6 Sampling **10**
7 Measurement and test methods **10**
7.1 Image quality 10
7.1.1 General 10
7.1.2 Resolving power and visual compression artefacts 11
7.1.3 Vignetting 11
7.1.4 Distortion 12
7.2 Optical characteristics 12
7.2.1 Angular field of view 12
7.2.2 Working range of the intraoral camera 12
7.2.3 Depth of field 12
7.3 Performance characteristics 13
7.3.1 Latency 13
7.3.2 Autofocus 14
7.3.3 Signal-to-noise ratio 14
7.3.4 Pixel error 14
8 Instructions for use, information on maintenance and servicing **14**
9 Technical description **15**

iTeh STANDARD PREVIEW
(standards.iteh.ai)
Full standard:
https://standards.iteh.ai/catalog/standards/sist/ddf1e92e-502b-4c89-93e6-6b0ff61d181c/iso-dis-23450

© ISO 2020 – All rights reserved

10 Marking **15**
10.1 General 15
10.2 Intraoral camera 15
11 Labelling **16**
Annex A (informative) **Examples of compression artefacts** **17**
Annex B (informative) **Line pairs conversion table** **18**

iTeh STANDARD PREVIEW
(standards.iteh.ai)
Full standard:
https://standards.iteh.ai/catalog/standards/sist/ddf1e92e-502b-4c89-93e6-6b0ff61d181c/iso-dis-23450

© ISO 2020 – All rights reserved

Foreword

ISO (the International Organization for Standardization) is a worldwide federation of national standards bodies (ISO member bodies). The work of preparing International Standards is normally carried out through ISO technical committees. Each member body interested in a subject for which a technical committee has been established has the right to be represented on that committee. International organizations, governmental and non-governmental, in liaison with ISO, also take part in the work. ISO collaborates closely with the International Electrotechnical Commission (IEC) on all matters of electrotechnical standardization.

The procedures used to develop this document and those intended for its further maintenance are described in the ISO/IEC Directives, Part 1. In particular, the different approval criteria needed for the different types of ISO documents should be noted. This document was drafted in accordance with the editorial rules of the ISO/IEC Directives, Part 2 (see www.iso.org/directives).

Attention is drawn to the possibility that some of the elements of this document may be the subject of patent rights. ISO shall not be held responsible for identifying any or all such patent rights. Details of any patent rights identified during the development of the document will be in the Introduction and/or on the ISO list of patent declarations received (see www.iso.org/patents).

Any trade name used in this document is information given for the convenience of users and does not constitute an endorsement.

For an explanation of the voluntary nature of standards, the meaning of ISO specific terms and expressions related to conformity assessment, as well as information about ISO's adherence to the World Trade Organization (WTO) principles in the Technical Barriers to Trade (TBT), see www.iso.org/iso/foreword.html.

This document was prepared by Technical Committee ISO/TC 106, *Dentistry*, Subcommittee SC 4, *Dental instruments*.

Any feedback or questions on this document should be directed to the user's national standards body. A complete listing of these bodies can be found at www.iso.org/members.html.

iTeh STANDARD PREVIEW
(standards.iteh.ai)
Full standard:
https://standards.iteh.ai/catalog/standards/sist/ddf1e926-502b-4c89-9356-6b0ff61181c/iso-dis-23450

© ISO 2020 – All rights reserved

Introduction

In the field of dentistry, intraoral cameras have been used in the oral cavity of the patient for many years. The intraoral camera provides the dentist with an aid which is able to significantly improve communication with the patient, facilitate documentation and raise the diagnostics to another qualitative level.

Technological advancement enables the continuous development of new and improved intraoral cameras, the handling of which is becoming easier and the possible applications of which are becoming more extensive.

These intraoral cameras are produced by the dental industry as high-quality medical devices under recognised quality management systems.

In order to maintain this high level of quality, this document describes the applicable technical product features.

This document refers to IEC 60601-1, the basic standard on safety of medical electrical equipment, wherever by stating the respective clause numbers of IEC 60601-1 and IEC 80601-2-60.

iTeh STANDARD PREVIEW
(standards.iteh.ai)
Full standard:
https://standards.iteh.ai/catalog/standards/sist/ddf1e92e-502b-4c89-93e6-6b0ff61d181c/iso-dis-23450

© ISO 2020 – All rights reserved

Dentistry — Intraoral camera

1 Scope

This document specifies requirements and test methods for intraoral cameras used in dentistry on the patient for pictorial representation of the oral cavity in order to support diagnosis and facilitate patient information. It specifies requirements, test methods, instructions for use and marking.

This document is not applicable to

a) powered polymerization activators for polymerization of dental materials;

b) exclusively extraoral camera equipment to prepare overviews or to record treatments;

c) dental microscopes for minimally invasive treatments;

d) medical endoscopes;

e) camera handpieces for tooth illumination (transillumination);

f) CAD/CAM scanner handpieces;

g) combinations of dental instruments with camera functions;

h) cameras for endodontic purposes;

i) devices for root canal inspection (endoscopic microcameras);

j) cameras for tool navigation;

k) cameras for determination of tooth colour.

iTeh STANDARD PREVIEW
(standards.iteh.ai)
Full standard:
https://standards.iteh.ai/catalog/standards/sist/ddf1e92e-502b-4c89-93e6-6b0ff6d181c/iso-dis-23450

2 Normative references

The following documents, in whole or in part, are normatively referenced in this document and are indispensable for its application. For dated references, only the edition cited applies. For undated references, the latest edition of the referenced document (including any amendments) applies.

ISO 1942, *Dentistry — Vocabulary*

ISO 9687, *Dentistry — Graphical symbols for dental equipment*

ISO 10993-1, *Biological evaluation of medical devices — Part 1: Evaluation and testing within a risk management process*

ISO 15223-1, *Medical devices — Symbols to be used with medical device labels, labelling and information to be supplied — Part 1: General requirements*

ISO 17664, *Processing of health care products — Information to be provided by the medical device manufacturer for the processing of medical devices*

ISO 21530, *Dentistry — Materials used for dental equipment surfaces — Determination of resistance to chemical disinfectants*

IEC 60601-1, *Medical electrical equipment — Part 1: General requirements for basic safety and essential performance + Amendment 1:2012*

IEC 62471, *Photobiological safety of lamps and lamp systems*

© ISO 2020 – All rights reserved

IEC 62366-1, *Medical devices — Part 1: Application of usability engineering to medical devices*

IEC 60601-1-6, *Medical electrical equipment — Part 1-6: General requirements for basic safety and essential performance - Collateral standard: Usability*

IEC 80601-2-60, *Medical electrical equipment — Part 2-60: Particular requirements for the basic safety and essential performance of dental equipment*

3 Terms and definitions

For the purposes of this document, the terms and definitions given in ISO 1942 and the following apply.

ISO and IEC maintain terminological databases for use in standardization at the following addresses:

— IEC Electropedia: available at http://www.electropedia.org/

— ISO Online browsing platform: available at http://www.iso.org/obp

3.1
intraoral camera
optical handpiece for use in the oral cavity of the patient to assist with diagnosis and facilitate patient information

3.2
patient side of intraoral camera
intraoral camera part which is designed to be introduced into the oral cavity where all parts of the dental handpiece within 80 mm to the tip shall be considered as an applied part according to IEC 60601-1

Note 1 to entry: See Figure 1.

[SOURCE: IEC 80601-2-60:2012,201.3.208 PATIENT SIDE OF DENTAL HANDPIECE]

iTeh STANDARD PREVIEW
(standards.iteh.ai)
Full standard:
https://standards.iteh.ai/catalog/standards/sist/ddf1e92e-502b-4c89-93e6-6b0f61d181c/iso-dis-23450

© ISO 2020 – All rights reserved

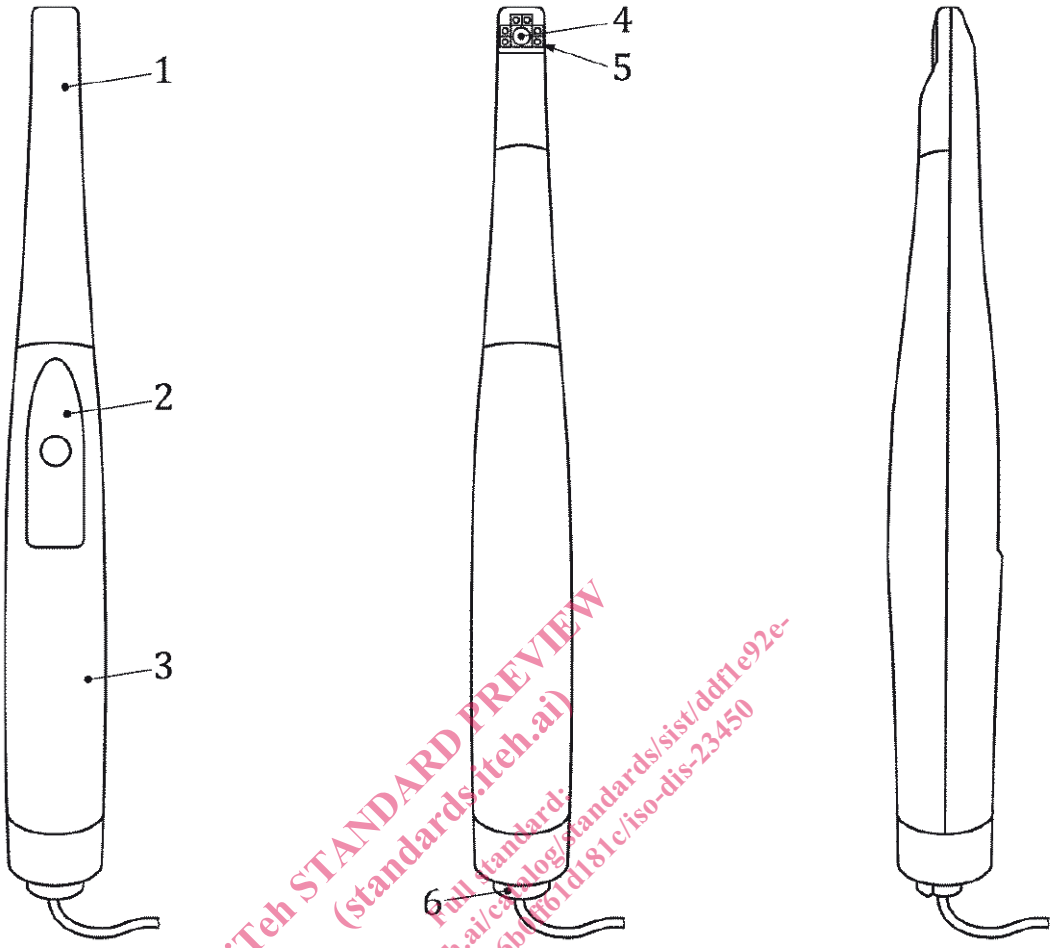

iTeh STANDARD PREVIEW
(standards.iteh.ai)
Full standard:
https://standards.iteh.ai/catalog/standards/sist/ddf1e92e-302b-4c89-93e6-6bdf61d181c/iso-dis-23450

Key

1 head (patient side of intraoral camera)
2 operation part (operator side of intraoral camera)
3 handheld part (operator side of intraoral camera)
4 viewing window (patient side of intraoral camera)
5 illumination part (patient side of intraoral camera)
6 interface (operator side of intraoral camera)

Figure 1 — Part designation of intraoral camera

3.3
operator side of intraoral camera
part of the intraoral camera which is designed to be handheld by the operator in normal use

3.4
resolving power
ability to distinguish between points or lines of an object which are close together in an image

Note 1 to entry: The resolving power is defined as the line frequency in line pairs per millimetre (lp/mm), which is still resolved with a CTF of 20 %.

Note 2 to entry: A high resolving power means that the resolved distance is small.

Note 3 to entry: Unless otherwise specified, this term relates to distances perpendicular to the optical axis.

© ISO 2020 – All rights reserved

3.5
contrast transfer function
CTF
measurement describing the resolving power by the number of equidistant black and white lines per millimetre which can still be resolved with a certain contrast (in percent)

EXAMPLE 5 lp/mm = 5 line pairs per millimetre.

3.6
dynamic range
ratio between the smallest and largest detectable light energy

Note 1 to entry: The dynamic range can be defined as a pure ratio (1: *n*) or in decibels (10 lg(*n*)).

Note 2 to entry: In a camera sensor, it is typically around 1: 20 000. Since its signal is quantized during digital further processing, however, the bit depth is the limiting factor. For example, dynamic range of just 1: 255 are achieved with 8 Bits.

Note 3 to entry: The optics are another limiting factor.

3.7
signal-to-noise ratio
fluctuation overlaying the signal in proportion to the signal average value

Note 1 to entry: Standard deviation = noise.

3.8
vignetting
measure for the relative irradiance in the image field

3.9
distortion
deviation from the ideal image due to an optical system whereby the lateral magnification in the image field varies with the distance from the optical axis

Note 1 to entry: The distortion is defined as a percentage of the image height.

3.11
angular field of view
angle under which an object appears at a given diagonal expansion and distance

Note 1 to entry: See Equation (2) in 5.7.1 for the angular field of view.

3.12
smallest resolvable distance
smallest distance from points in an object which are clearly observed in the image

Note 1 to entry: Unless otherwise specified, this term relates to distances perpendicular to the optical axis.

3.13
working distance
distance between the object and the outside of the light entrance window of the intraoral camera.

3.14
direction of view
location of the center of the object field relative to the normal axis of the intraoral camera expressed as the angle (in degrees) between the normal axis of the intraoral camera and the central axis of the field of view.

iTeh STANDARD PREVIEW
(standards.iteh.ai)
Full standard:
https://standards.iteh.ai/catalog/standards/sist/ddf1e92e-502b-4f89-93e6-c30ff61d181c/iso-dis-23450

© ISO 2020 – All rights reserved