INTERNATIONAL STANDARD

ISO 24068-2

First edition
2021-05

Building and civil engineering sealants — Determination of the degree of cure —

Part 2: Build-up of tensile and adhesion properties in test joint specimens

Reference number
ISO 24068-2:2021(E)

ISO copyright office
CP 401 • Ch. de Blandonnet 8
CH-1214 Vernier, Geneva
Phone: +41 22 749 01 11
Email: copyright@iso.org
Website: www.iso.org

Published in Switzerland

Contents

Page

Foreword ... **iv**
1 Scope ... **1**
2 Normative references ... **1**
3 Terms and definitions ... **1**
4 Principle ... **1**
5 Apparatus and materials ... **2**
6 Preparation of test specimen ... **4**
7 Conditioning of test and reference specimens ... **4**
7.1 Conditioning of test specimens ... 4
7.2 Conditioning of reference specimens ... 4
7.2.1 General ... 4
7.2.2 Method A ... 4
7.2.3 Method B ... 5
8 Test procedure ... **5**
9 Calculation and expression of test result ... **5**
9.1 Tensile stress (secant modulus) ... 5
9.2 Tensile strength ... 6
9.3 Degree of cure ... 6
9.4 Rounding of results ... 6
10 Test report ... **6**

Foreword

ISO (the International Organization for Standardization) is a worldwide federation of national standards bodies (ISO member bodies). The work of preparing International Standards is normally carried out through ISO technical committees. Each member body interested in a subject for which a technical committee has been established has the right to be represented on that committee. International organizations, governmental and non-governmental, in liaison with ISO, also take part in the work. ISO collaborates closely with the International Electrotechnical Commission (IEC) on all matters of electrotechnical standardization.

The procedures used to develop this document and those intended for its further maintenance are described in the ISO/IEC Directives, Part 1. In particular, the different approval criteria needed for the different types of ISO documents should be noted. This document was drafted in accordance with the editorial rules of the ISO/IEC Directives, Part 2 (see www.iso.org/directives).

Attention is drawn to the possibility that some of the elements of this document may be the subject of patent rights. ISO shall not be held responsible for identifying any or all such patent rights. Details of any patent rights identified during the development of the document will be in the Introduction and/or on the ISO list of patent declarations received (see www.iso.org/patents).

Any trade name used in this document is information given for the convenience of users and does not constitute an endorsement.

For an explanation of the voluntary nature of standards, the meaning of ISO specific terms and expressions related to conformity assessment, as well as information about ISO's adherence to the World Trade Organization (WTO) principles in the Technical Barriers to Trade (TBT), see www.iso.org/iso/foreword.html.

This document was prepared by Technical Committee ISO/TC 59, *Buildings and civil engineering works*, Subcommittee SC 8, *Sealants*.

A list of all parts in the ISO 24068 series can be found on the ISO website.

Any feedback or questions on this document should be directed to the user's national standards body. A complete listing of these bodies can be found at www.iso.org/members.html.

Building and civil engineering sealants — Determination of the degree of cure —

Part 2:
Build-up of tensile and adhesion properties in test joint specimens

1 Scope

This document specifies a method for the determination of the degree of cure of one- and multi-component sealants used in joints as indicated by the build-up of the tensile and adhesion properties in test joint specimens during cure.

2 Normative references

The following documents are referred to in the text in such a way that some or all of their content constitutes requirements of this document. For dated references, only the edition cited applies. For undated references, the latest edition of the referenced document (including any amendments) applies.

ISO 6927, *Building and civil engineering sealants — Vocabulary*

ISO 8339, *Building construction — Sealants — Determination of tensile properties (Extension to break)*

ISO 13640, *Buildings and civil engineering works — Sealants — Specifications for test substrates*

ISO 80000-1:2009, *Quantities and units — Part 1: General*

3 Terms and definitions

For the purposes of this document, the terms and definitions given in ISO 6927 apply.

ISO and IEC maintain terminological databases for use in standardization at the following addresses:

— ISO Online browsing platform: available at https://www.iso.org/obp

— IEC Electropedia: available at http://www.electropedia.org/

4 Principle

The degree of cure of joint-shaped test specimen of a (ambient temperature curing) sealant is determined as the ratio between the value of engineering tensile stress (secant modulus) and/or tensile strength at any time during cure and the corresponding value measured after a reference cure period (conditioning A or B or any other reference cure period or conditions as agreed by the parties concerned).

5 Apparatus and materials

5.1 Substrate supports, made of substrate materials as defined in ISO 13640, to be selected from mortar and/or anodized aluminium and/or glass for the preparation of substrate pieces. Other substrate materials may be used as agreed by the parties concerned.

For each test specimen, two substrate supports of the same material are required with a cross-section of dimensions as defined ISO 8339 (see Figures 1 and 2). Test substrates of other dimensions may be used. In this case, the dimensions of the sealant bead and the area of adhesion shall be the same as those defined in ISO 8339.

Dimensions in millimetres

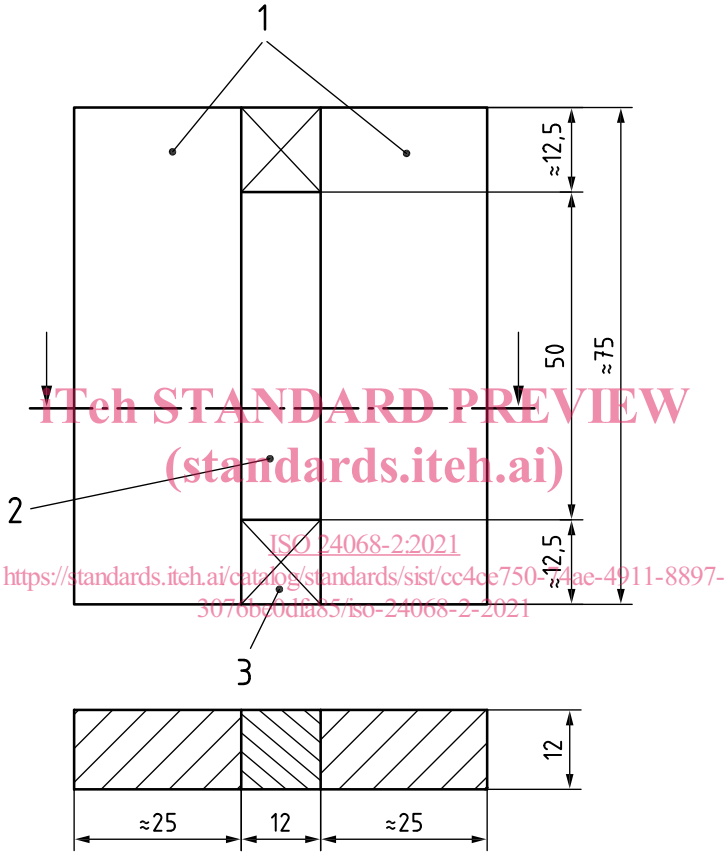

Key

1 mortar substrates

2 sealant

3 spacer

Figure 1 — Test specimen with mortar substrates

Dimensions in millimetres

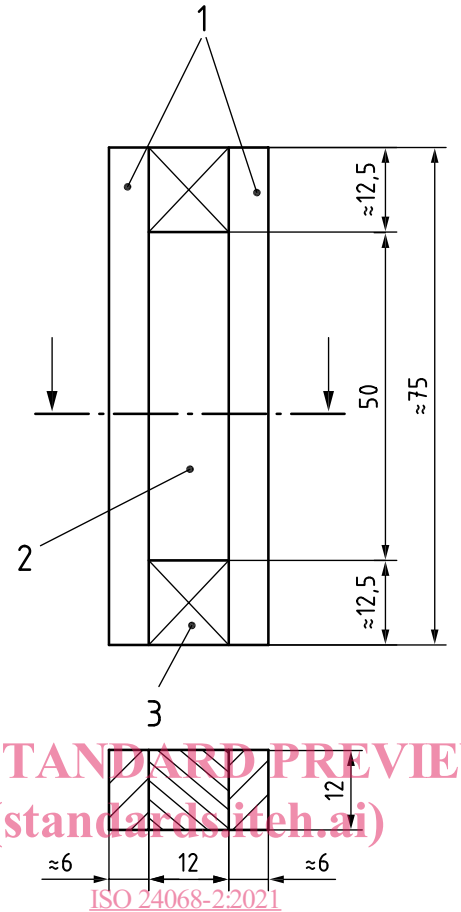

Key

1 anodized aluminium or glass substrates

2 sealant

3 spacer

Figure 2 — Test specimen with anodized aluminium or glass substrates

5.2 Spacers, of cross-section (12 mm × 12 mm) with anti-adherent surface to be used for the preparation of test specimens in accordance with ISO 8339.

5.3 Anti-adherent substrate, e.g. microporous polytetrafluoroethylene (PTFE) film, preferably selected according to the advice of the sealant manufacturer, for the preparation of the test specimens.

5.4 Tensile-testing machine with recording device, capable of extending the test specimens at a rate of (5,5 ± 0,5) mm/min.

5.5 Ventilated convection-type oven, capable of being maintained at (70 ± 2) °C for conditioning according to method B (see 7.2.3).

5.6 Water-tight container, to immerse the test specimens in distilled water for conditioning according to method B (see 7.2.3).

6 Preparation of test specimen

The sealant in its unopened package, the substrate pieces, and the spacers shall be conditioned at (23 ± 2) °C and (50 ± 10) % relative humidity for a minimum of 16 h prior to the preparation of the test specimens.

For each substrate type, each cure interval, and the reference cure (method A or B, see 7.2.2, 7.2.3 and Clause 8), three test specimens shall be prepared. Thus, a minimum of six test specimens are needed for the test (assuming the experimenter choses one substrate, one cure interval and one reference cure for the testing).

For multi-component sealants, the instructions of the sealant manufacturer regarding the mixing procedure shall be followed. One-component sealants can be applied directly from the original container.

For each test specimen, two substrate pieces (5.1) and two spacers (5.2) shall be assembled in accordance with ISO 8339 and set on the anti-adherent substrate (5.3). Follow the instructions of the sealant manufacturer whether a primer is to be used.

Fill the volume between the substrate supports and spacers with sealant.

The following precautions shall be taken:

a) ensure that no air pockets are entrapped in the sealant by filling the test joint cavity from the bottom;

b) ensure that no leaks occur at the bottom of the test joint specimen;

c) trim the sealant surface so that it is flush with the faces of the substrate supports and spacers.

The test specimens shall be set on the edge of one of the supports. The anti-adherent substrate shall be removed as soon as possible. The specimens shall be placed in this position to allow curing or optimum drying of the sealant. The spacers shall be maintained in place during conditioning.

7 Conditioning of test and reference specimens

7.1 Conditioning of test specimens

The test specimens shall be conditioned (cured) for a specified period of time (cure interval) at standard conditions of (23 ± 2) °C and (50 ± 10) % relative humidity. One or several arbitrary cure intervals may be selected, as agreed by the parties concerned. Typically, cure intervals are selected from the following: 16 h, 24 h, 48 h, 72 h, 4 d (96 h), 7 d (168 h), 14 d (336 h).

7.2 Conditioning of reference specimens

7.2.1 General

The three reference specimens shall be conditioned either in accordance with method A (see 7.2.2) or method B (see 7.2.3), or any other reference cure period or conditions (method C: custom) as agreed by the parties concerned.

7.2.2 Method A

The reference specimens shall be conditioned for 28 d at (23 ± 2) °C and (50 ± 10) % relative humidity.

7.2.3 Method B

The reference specimens shall be conditioned according to method A and shall then be subjected three times to the following storage cycle:

a) 3 d in the oven (5.5) at (70 ± 2) °C;

b) 1 d in distilled water (5.6) at (23 ± 2) °C;

c) 2 d in the oven (5.5) at (70 ± 2) °C;

d) 1 d in distilled water (5.6) at (23 ± 2) °C.

Alternatively, this cycle may be carried out in the order c), d), a), b).

After conditioning according to method B, the test specimens shall be stored for 24 h at (23 ± 2) °C and (50 ± 10) % relative humidity before testing.

NOTE Method B is a normal conditioning procedure using the influence of heat and water. It is not suitable for giving information on the durability of the sealant.

8 Test procedure

The test procedure shall be carried out at standard conditions of (23 ± 2) °C and (50 ± 10) % relative humidity. A minimum of three test and three reference specimens shall be tested.

At any time when the degree of cure needs to be determined (after the selected cure interval), remove the spacers of the test and reference specimens, place them in the tensile testing machine and extend them at a rate of (5,5 ± 0,5) mm/min until rupture occurs.

Exercise care when removing the spacers for slow curing sealants as even minor induced movements can affect the test results.

For each test and reference specimen, the stress-strain diagram as well as the values of tensile stress (secant modulus) at the chosen elongation (100 % or 60 %, or any other elongation as decided by the parties concerned), tensile strength (maximum tensile stress), and the type of failure (adhesive or cohesive) shall be recorded.

In the same manner, the reference test specimens shall be tested after completing conditioning method A or B, or any other reference cure period or conditions as agreed by the parties concerned.

9 Calculation and expression of test result

9.1 Tensile stress (secant modulus)

For each test and reference specimen the engineering tensile stress (σ) at the chosen elongation shall be determined in accordance with ISO 8339 and recorded to three significant digits using Formula (1):

$$\sigma = \frac{F}{S} \tag{1}$$

where

σ is the engineering tensile stress (secant modulus), expressed in newtons per square millimetre;

F is the force at chosen elongation, expressed in newtons;

S is the original (before any load is applied) cross-sectional area of the specimen, expressed in square millimetres.

Determine the arithmetic mean of the tensile stress values recorded for the test and reference specimens, expressed in newtons per square millimetre (N/mm^2), rounded in one step to the rounding interval of 0,01 N/mm^2 in accordance with the provisions of ISO 80000-1:2009, Annex B.

9.2 Tensile strength

For each test and reference specimen the maximum engineering tensile stress (σ_{max}) shall be determined in accordance with ISO 8339 and recorded to three significant digits by extending the test specimen to breaking point. Determine the arithmetic mean of the tensile strength values recorded for the test and reference specimens, expressed in newtons per square millimetre (N/mm^2), rounded in one step to the rounding interval of 0,01 N/mm^2 in accordance with the provisions of ISO 80000-1:2009, Annex B.

NOTE A maximum in the tensile stress-strain curve can occur before the specimen breaks. In such situations, the values of maximum tensile stress and tensile stress at break differ from each other.

9.3 Degree of cure

Calculate the rate degree of cure, expressed in per cent as relation of the tensile stress, or tensile strength of the test specimens to the reference test specimens, using Formula (2):

$$R_C = \frac{X}{X_r} \times 100\ \% \tag{2}$$

where

R_c is the rate degree of cure, expressed in per cent;

X is the arithmetic mean of the tensile stress, or tensile strength of the test specimens tested at any time during cure;

X_r is the arithmetic mean of the tensile stress, or tensile strength of the reference test specimens after the reference cure.

The degree of cure shall be denoted as follows: for tensile stress as $R_{c(\sigma),A,B,C}$ and for tensile strength as $R_{c(\sigma max)A,B,C}$, the indices A, B and C (custom) refer to the method of conditioning of the reference specimens.

9.4 Rounding of results

Values of tensile stress and maximum tensile strength obtained for the test and reference specimens shall be rounded in one step to the rounding interval of 0,01 N/mm^2 in accordance with the following procedure, which is based on the guidance given in ISO 80000-1:2009, Annex B:

a) if the figure immediately after the last figure to be retained is less than five, the last figure to be retained shall be kept unchanged;

b) if the figure immediately after the last figure to be retained is equal to or greater than five, the last figure to be retained shall be increased by one.

Rounding shall be done in one step and not in two or more successive rounding steps. For example, 2,444 6 rounds to 2,44 and not first to 2,445 and then to 2,45.

10 Test report

The test report shall contain the following information:

a) test laboratory's name and date of test;

b) reference to this document, i.e. ISO 24068-2:2021;

