SLOVENSKI STANDARD
SIST EN 991:2001

01-april-2001

Doloḷ evanje mer montaǵnih armiranih elementov iz avtoklaviranega celiḷ astega betona ali betona iz lahkega agregata z odprto strukturo

Determination of the dimension of prefabricated reinforced components made of autoclaved aerated concrete or lightweight aggregate concrete with open structure

Bestimmung der Maße vorgefertigter bewehrter Bauteile aus dampfgehärtetem Porenbeton oder haufwerksporigem Leichtbeton

Détermination des dimensions de composants préfabriqués armés en béton cellulaire autoclavé ou en béton de granulats légers a structure ouverte

Ta slovenski standard je istoveten z: EN 991:1995

ICS:

91.100.30	Beton in betonski izdelki	Concrete and concrete products

SIST EN 991:2001 **en**

EUROPEAN STANDARD **EN 991**

NORME EUROPÉENNE

EUROPÄISCHE NORM May 1995

ICS 91.080.40; 91.100.30

Descriptors: concrete, cellular concrete, aggregates, tests, dimensional measurements, dimensions squaring

English version

Determination of the dimensions of prefabricated reinforced components made of autoclaved aerated concrete or lightweight aggregate concrete with open structure

Détermination des dimensions de composants préfabriqués armés en béton cellulaire autoclavé ou en béton de granulats légers à structure ouverte

Bestimmung der Maße vorgefertigter bewehrter Bauteile aus dampfgehärtetem Porenbeton oder haufwerksporigem Leichtbeton

This European Standard was approved by CEN on 1995-04-14. CEN members are bound to comply with the CEN/CENELEC Internal Regulations which stipulate the conditions for giving this European Standard the status of a national standard without any alteration.

Up-to-date lists and bibliographical references concerning such national standards may be obtained on application to the Central Secretariat or to any CEN member.

The European Standards exist in three official versions (English, French, German). A version in any other language made by translation under the responsibility of a CEN member into its own language and notified to the Central Secretariat has the same status as the official versions.

CEN members are the national standards bodies of Austria, Belgium, Denmark, Finland, France, Germany, Greece, Iceland, Ireland, Italy, Luxembourg, Netherlands, Norway, Portugal, Spain, Sweden, Switzerland and United Kingdom.

CEN

European Committee for Standardization
Comité Européen de Normalisation
Europäisches Komitee für Normung

Central Secretariat: rue de Stassart,36 B-1050 Brussels

Ref. No. EN 991:1995 E

Contents

Foreword

This European Standard has been prepared by the Technical Committee CEN/TC 177 "Prefabricated reinforced components of autoclaved aerated concrete or light-weight aggregate concrete with open structure", of which the secretariat is held by DIN.

This European Standard shall be given the status of a National Standard, either by publication of an identical text or by endorsement, at the latest by November 1995, and conflicting national standards shall be withdrawn at the latest by November 1995.

In order to meet the performance requirements as laid down in the product standard for prefabricated components of lightweight aggregate concrete with open structure a number of standardized test methods are necessary.

According to the CEN/CENELEC Internal Regulations, the following countries are bound to implement this European Standard: Austria, Belgium, Denmark, Finland, France, Germany, Greece, Iceland, Ireland, Italy, Luxembourg, Netherlands, Norway, Portugal, Spain, Sweden, Switzerland and the United Kingdom.

1 Scope

This European Standard specifies a method of determining the essential dimensions and of verification of squareness of prefabricated reinforced components made of autoclaved aerated (AAC)[1] or lightweight aggregate concrete (LAC) with open structure according to prEN 1520.

2 Normative references

This European Standard incorporates by dated or undated reference, provisions from other publications. These normative references are cited at the appropriate places in the text and the publications are listed hereafter. For dated references, subsequent amendments to or revisions of any of these publications apply to this European Standard only when incorporated in it by amendment or revision. For undated references the latest edition of the publication referred to applies.

prEN 990	Test methods for verification of corrosion protection of reinforcement in autoclaved aerated concrete and lightweight aggregate concrete with open structure
prEN 1356	Performance test under transversal load for prefabricated reinforced components made of autoclaved aerated concrete or lightweight aggregate concrete with open structure
prEN 1520	Prefabricated components of lightweight aggregate concrete with open structure
ISO 7976-1	Tolerances for building - Methods of measurement of buildings and building products - Part 1: Methods and instruments

3 Principle

The length, width, thickness and, where required, other essential dimensions of the components are measured by means of a rule, a tape measure, calipers or another suitable measuring device. In addition, for nominally rectangular components the squareness is checked.

---

[1] A standard about "prefabricated reinforced elements of autoclaved aerated concrete" is in preparation at CEN.

4 Apparatus

a) Any measuring instrument for the determination of linear dimensions which meets the requirements of ISO 7976-1 and allows readings with an accuracy of 1 mm;

b) Position pieces for defining edges of components with profiled faces or with a distinct surface texture, which meet the requirements of ISO 7976-1;

c) A square with sides of at least 500 mm length.

5 Procedure

5.1 General

In the case of components presenting profiled faces or surfaces with a considerable roughness in relation to the permitted dimensional deviations, the measurements shall be taken with the aid of suitable position pieces placed on the object of measurement.

The number of measuring points indicated in 5.2 to 5.7 is considered to be the minimum number required; additional measurements may therefore be taken to reflect any additional dimensional accuracy requirements.

5.2 Measurement of length and width

On each face of the component, three length measurements L_1 to L_3 and three width measurements W_1 to W_3 shall be taken as shown in figure 1.

Figure 1: Position of measuring points for length and width measurements

If the specified width does not exceed 1,20 m, measurement L_2 may be omitted. If the specified length does not exceed 1,20 m, measurement W_2 may be omitted.

5.3 Measurement of thickness

Eight thickness mesaurements shall be taken as shown in figure 2.

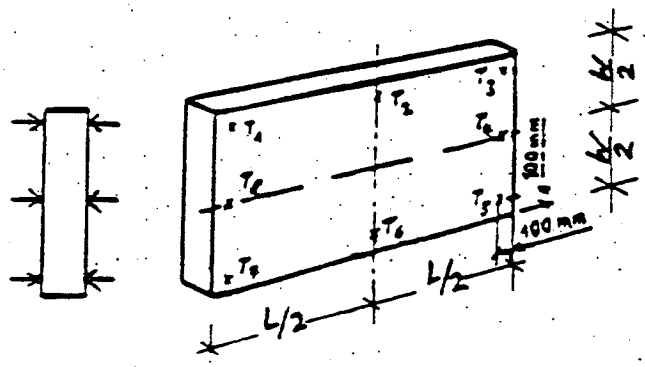

Figure 2: Position of measuring points for thickness measurements

Where the specified width does not exceed 1,20 m, measurements at points T_4 and T_8 may be omitted.
Where the specified length does not exceed 1,20 m, measurements at points T_2 and T_6 may be omitted.

5.4 Measurement of the shape of profiled faces

Where required the main dimensions of tongue and groove profiles or otherwise profiled edges shall be measured at least at three measuring points along each profiled edge, e. g. in the neighbourhood of the measuring points indicated in figure 2.

5.5 Verification of squareness

The squareness of nominally rectangular components in their plane shall be checked at both ends by means of a square as shown in figure 3.

The deviation of squareness is defined as the distance , expressed in millimetres, between the square at a distance of 500 mm from the apex and the connecting line of the two corners adjacent to the end face under consideration.

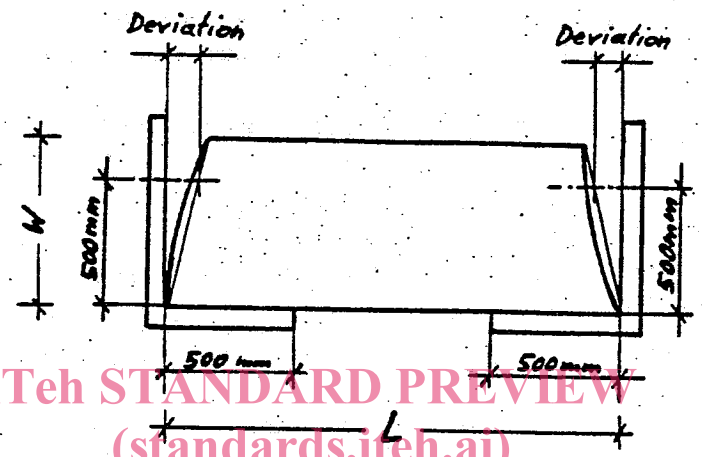

Figure 3: Examination of squareness

5.6 Additional measurements for hollow core components made of lightweight aggregate concrete with open structure

At both ends of hollow core components the following dimensions shall be measured:

- Thickness of the concrete above and below each cavity (dimensions d_1 and d_2 according to figure 2 of prEN 1520
- Minimum width of the section after subtracting the width of the cavities and the depth of grooves.

5.7 Additional measurements for multilayer components

The thickness of the individual layers shall be measured at least at three measuring points distributed over the width in a section near midspan. These measurements may be performed at components previously tested in a load test according to prEN 1356 or at sections used for the corrosion test according to prEN 990.

6 Test report

The test report shall include the following:

a) Identification of the product;

b) date of manufacture or other code;

c) date of sampling;

d) place and date of testing, testing institute and person responsible for testing;

e) number and date of edition of this European Standard;

f) mean values of measured dimensions rounded to the nearest 1 mm, for each individual component;

g) in the case of nominally rectangular components: deviation from squareness rounded to the nearest mm at both opposite end faces;

h) observations on the appearance of the components effecting the measurements.