# INTERNATIONAL STANDARD ISO 2903

INTERNATIONAL ORGANIZATION FOR STANDARDIZATION • МЕЖДУНАРОДНАЯ ОРГАНИЗАЦИЯ ПО СТАНДАРТИЗАЦИИ • ORGANISATION INTERNATIONALE DE NORMALISATION

## ISO metric trapezoidal screw threads — Tolerances

*Filetages métriques trapézoïdaux ISO — Tolérances*

First edition — 1977-10-01



UDC 621.882.082.4 : 621.753.1

Ref. No. ISO 2903-1977 (E)

**Descriptors** : screw threads, trapezoidal threads, specifications, dimensional tolerances, fundamental deviations, rules of calculation, designation.



Price based on 10 pages

## FOREWORD

ISO (the International Organization for Standardization) is a worldwide federation of national standards institutes (ISO member bodies). The work of developing International Standards is carried out through ISO technical committees. Every member body interested in a subject for which a technical committee has been set up has the right to be represented on that committee. International organizations, governmental and non-governmental, in liaison with ISO, also take part in the work.

Draft International Standards adopted by the technical committees are circulated to the member bodies for approval before their acceptance as International Standards by the ISO Council.

International Standard ISO 2903 was developed by Technical Committee ISO/TC 1, *Screw threads,* and was circulated to the member bodies in June 1976.



It has been approved by the member bodies of the following countries :

| | | |
|---|---|---|
| Austria | India | Romania |
| Belgium | Ireland | South Africa, Rep. of |
| Brazil | Italy | Spain |
| Canada | Korea, Rep. of | Sweden |
| Denmark | Mexico | Switzerland |
| Finland | Netherlands | U.S.A. |
| France | New Zealand | U.S.S.R. |
| Germany | Norway | |
| Hungary | Poland | |



The member bodies of the following countries expressed disapproval of the document on technical grounds :

Japan
United Kingdom



Printed in Switzerland

# ISO metric trapezoidal screw threads — Tolerances

## 1 SCOPE AND FIELD OF APPLICATION

This International Standard specifies a tolerance system for metric trapezoidal screw threads according to ISO 2902. The tolerances refer to the basic profile according to ISO 2901.

The tolerance system does not apply to trapezoidal screw threads with special requirements on axial displacement, for example lead screws.



## 2 REFERENCES

ISO 965/I, *ISO general purpose metric screw threads — Tolerances — Principles and basic data.*



ISO 2901, *ISO metric trapezoidal screw threads — Basic profile and maximum material profiles.*

ISO 2902, *ISO metric trapezoidal screw threads — General plan.*

## 3 STRUCTURE OF THE TOLERANCE SYSTEM

The system is based on the tolerance system for ISO general purpose metric screw threads of ISO 965/I, completed with tolerance positions c and e, and with values for pitches above 6 mm.

The recommended tolerance classes are, however, not the same as those for ISO metric screw threads in ISO 965/I.

## 4 TERMINOLOGY AND SYMBOLS

### 4.1 Terminology

The term "bolt threads" is used for external screw threads, the term "nut threads" for internal screw threads.

### 4.2 Symbols

The following symbols are used :

| Symbol | Explanation |
|---|---|
| $D_4$ | basic major diameter of nut thread |
| $D_1$ | basic minor diameter of nut thread |
| $D_2$ | basic pitch diameter of nut thread |
| $d$ | basic major diameter of bolt thread |
| $d_3$ | basic minor diameter of bolt thread |
| $d_2$ | basic pitch diameter of bolt thread |
| $P$ | pitch |
| N | designation for thread engagement group Normal |
| L | designation for thread engagement group Long |
| $T$ | tolerance |
| $T_{D_1}$ $T_{D_2}$ $T_d$ $T_{d_3}$ $T_{d_2}$ | tolerances for $D_1$, $D_2$, $d$, $d_3$, $d_2$ (for $D_4$ no tolerances are specified) |
| $ei$ $EI$ | lower deviations ($EI$ for the nut threads is equal to zero) |
| $es$ $ES$ | upper deviations |

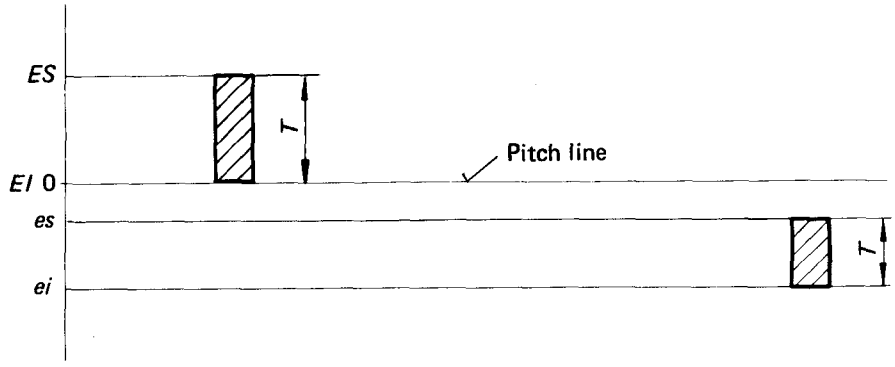


FIGURE 1 — **Tolerance positions with respect to zero line (basic size)**

## 5 DESIGNATION

A complete designation for a screw thread shall comprise a designation for the thread system and size, and a designation for the thread tolerance.

The thread designation appears in ISO 2902.

The tolerance designation consists of a symbol for the pitch diameter tolerance only.

There is no need to designate the crest diameter tolerance since

— the tolerance position is always the same;

— only one tolerance grade is established for the minor diameter of nut threads ($D_1$) and for the major diameter of bolt threads ($d$).

Each tolerance designation shall comprise :

— a figure indicating the grade of the pitch diameter tolerance;

— a letter indicating the position of the pitch diameter tolerance, capital for nuts, small for bolts.

*Examples* :

for nut threads :

Tr 40 x 7 – 7H

for bolt threads :

Tr 40 x 7 – 7e

for two starts left-hand bolt threads :

Tr 40 x 14 (P7) LH – 7e

A fit between threaded parts is indicated by the nut thread tolerance designation followed by the bolt thread tolerance designations separated by a stroke.

*Example* :

Tr 40 x 7 – 7H/7e
Tr 40 x 14 (P7) – 7H/7e

## 6 TOLERANCE GRADES

The following tolerance grades are established :

| | Tolerance grades | | | |
|---|---|---|---|---|
| Minor diameter of nut threads $D_1$ : | | 4 | | |
| Major diameter of bolt threads $d$ : | | 4 | | |
| Pitch diameter of nut threads $D_2$ : | | 7 | 8 | 9 |
| Pitch diameter of bolt threads $d_2$ : | (6)[1] | 7 | 8 | 9 |
| Minor diameter of bolt threads $d_3$ : | | 7 | 8 | 9 |

The tolerance grade for the minor diameter ($d_3$) of the bolt thread is always the same as for the pitch diameter ($d_2$).

However, the values for $T_{d_3}$ and $T_{d_2}$ are not the same for a same grade because $T_{d_3} = 1{,}25\ T_{d_2} + |es|$.

## 7 TOLERANCE POSITIONS

The following tolerance positions are standardized for the pitch diameter :

— for nut threads : H with zero fundamental deviation;

— for bolt threads : c and e with negative fundamental deviation.

The tolerance position for the minor diameter $D_1$ and the major diameter $D_4$ of the nut threads is always H, i.e. with zero fundamental deviation. The tolerance position for the major diameter $d$ and minor diameter $d_3$ of the bolt threads is in all cases h, i.e. with zero fundamental deviation, and it is independent of the tolerance position of the pitch diameter.

TABLE 1 — **Fundamental deviations for the pitch diameter of nut threads and bolt threads**

| Pitch | Fundamental deviation | | |
|---|---|---|---|
| | Nut thread | Bolt thread | |
| | $D_2$ | $d_2$ | |
| $P$ | H<br>$EI$ | c<br>$es$ | e<br>$es$ |
| mm | µm | µm | µm |
| 1,5 | 0 | – 140 | – 67 |
| 2 | 0 | – 150 | – 71 |
| 3 | 0 | – 170 | – 85 |
| 4 | 0 | – 190 | – 95 |
| 5 | 0 | – 212 | – 106 |
| 6 | 0 | – 236 | – 118 |
| 7 | 0 | – 250 | – 125 |
| 8 | 0 | – 265 | – 132 |
| 9 | 0 | – 280 | – 140 |
| 10 | 0 | – 300 | – 150 |
| 12 | 0 | – 335 | – 170 |
| 14 | 0 | – 355 | – 180 |
| 16 | 0 | – 375 | – 190 |
| 18 | 0 | – 400 | – 200 |
| 20 | 0 | – 425 | – 212 |
| 22 | 0 | – 450 | – 224 |
| 24 | 0 | – 475 | – 236 |
| 28 | 0 | – 500 | – 250 |
| 32 | 0 | – 530 | – 265 |
| 36 | 0 | – 560 | – 280 |
| 40 | 0 | – 600 | – 300 |
| 44 | 0 | – 630 | – 315 |



1) Tolerance grade 6 has been included only as a means to establish the pitch diameter tolerances of grades 7, 8 and 9. See 13.4.2.

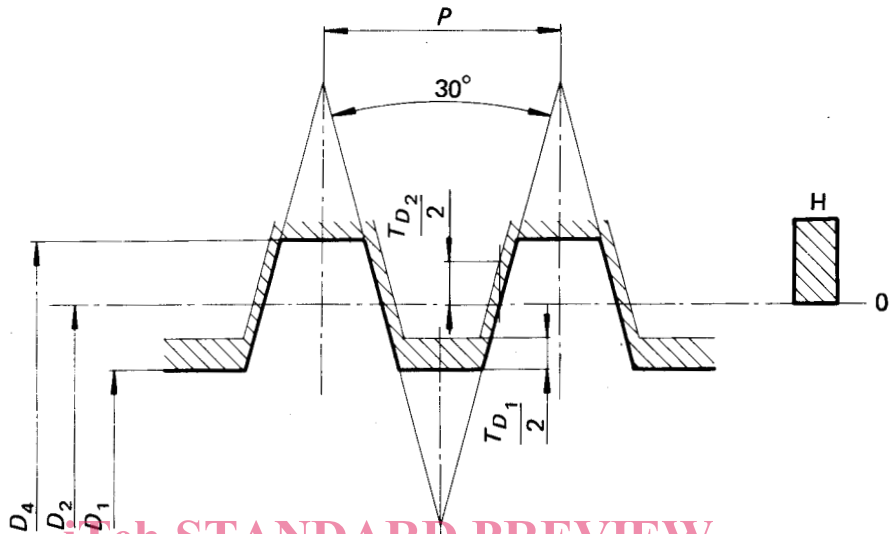




FIGURE 2 – Nut threads with tolerance position H for the pitch diameter



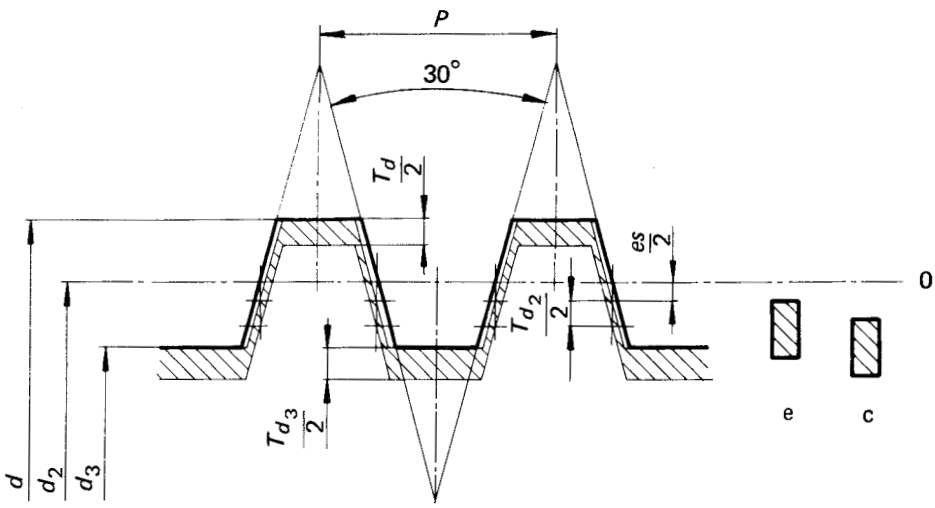


FIGURE 3 – Bolt threads with tolerance positions c and e for the pitch diameter

## 8 LENGTHS OF THREAD ENGAGEMENT

The length of thread engagement is classified into the groups N or L, in accordance with table 2.

TABLE 2 — **Length of thread engagement**

Dimensions in millimetres

| Basic major diameter *d* | | Pitch *P* | Groups of lengths of thread engagement, *l* | | |
|---|---|---|---|---|---|
| | | | N | | L |
| over | up to and incl. | | over | up to and incl. | over |
| 5,6 | 11,2 | 1,5 | 5 | 15 | 15 |
| | | 2 | 6 | 19 | 19 |
| | | 3 | 10 | 28 | 28 |
| 11,2 | 22,4 | 2 | 8 | 24 | 24 |
| | | 3 | 11 | 32 | 32 |
| | | 4 | 15 | 43 | 43 |
| | | 5 | 18 | 53 | 53 |
| | | 8 | 30 | 85 | 85 |
| 22,4 | 45 | 3 | 12 | 36 | 36 |
| | | 5 | 21 | 63 | 63 |
| | | 6 | 25 | 75 | 75 |
| | | 7 | 30 | 85 | 85 |
| | | 8 | 34 | 100 | 100 |
| | | 10 | 42 | 125 | 125 |
| | | 12 | 50 | 150 | 150 |
| 45 | 90 | 3 | 15 | 45 | 45 |
| | | 4 | 19 | 56 | 56 |
| | | 8 | 38 | 118 | 118 |
| | | 9 | 43 | 132 | 132 |
| | | 10 | 50 | 140 | 140 |
| | | 12 | 60 | 170 | 170 |
| | | 14 | 67 | 200 | 200 |
| | | 16 | 75 | 236 | 236 |
| | | 18 | 85 | 265 | 265 |
| 90 | 180 | 4 | 24 | 71 | 71 |
| | | 6 | 36 | 106 | 106 |
| | | 8 | 45 | 132 | 132 |
| | | 12 | 67 | 200 | 200 |
| | | 14 | 75 | 236 | 236 |
| | | 16 | 90 | 265 | 265 |
| | | 18 | 100 | 300 | 300 |
| | | 20 | 112 | 335 | 335 |
| | | 22 | 118 | 355 | 355 |
| | | 24 | 132 | 400 | 400 |
| | | 28 | 150 | 450 | 450 |
| 180 | 355 | 8 | 50 | 150 | 150 |
| | | 12 | 75 | 224 | 224 |
| | | 18 | 112 | 335 | 335 |
| | | 20 | 125 | 375 | 375 |
| | | 22 | 140 | 425 | 425 |
| | | 24 | 150 | 450 | 450 |
| | | 32 | 200 | 600 | 600 |
| | | 36 | 224 | 670 | 670 |
| | | 40 | 250 | 750 | 750 |
| | | 44 | 280 | 850 | 850 |

## 9 CREST AND ROOT DIAMETER TOLERANCES

### 9.1 Minor diameter tolerance of nut thread ($T_{D_1}$)

For the minor diameter tolerance of the nut thread, $T_{D_1}$, there is only one tolerance grade, 4 (see table 3).

TABLE 3 – **Minor diameter tolerance of nut threads ($T_{D_1}$)**

| Pitch $P$ | Tolerance grade 4 |
|---|---|
| mm | µm |
| 1,5 | 190 |
| 2 | 236 |
| 3 | 315 |
| 4 | 375 |
| 5 | 450 |
| 6 | 500 |
| 7 | 560 |
| 8 | 630 |
| 9 | 670 |
| 10 | 710 |
| 12 | 800 |
| 14 | 900 |
| 16 | 1 000 |
| 18 | 1 120 |
| 20 | 1 180 |
| 22 | 1 250 |
| 24 | 1 320 |
| 28 | 1 500 |
| 32 | 1 600 |
| 36 | 1 800 |
| 40 | 1 900 |
| 44 | 2 000 |

### 9.2 Major diameter tolerance of bolt thread ($T_d$)

For the major diameter tolerance of the bolt thread, $T_d$, there is only one tolerance grade, 4 (see table 4).

TABLE 4 – **Major diameter tolerance of bolt thread ($T_d$)**

| Pitch $P$ | Tolerance grade 4 |
|---|---|
| mm | µm |
| 1,5 | 150 |
| 2 | 180 |
| 3 | 236 |
| 4 | 300 |
| 5 | 335 |
| 6 | 375 |
| 7 | 425 |
| 8 | 450 |
| 9 | 500 |
| 10 | 530 |
| 12 | 600 |
| 14 | 670 |
| 16 | 710 |
| 18 | 800 |
| 20 | 850 |
| 22 | 900 |
| 24 | 950 |
| 28 | 1 060 |
| 32 | 1 120 |
| 36 | 1 250 |
| 40 | 1 320 |
| 44 | 1 400 |

### 9.3 Minor diameter tolerance of bolt thread ($T_{d_3}$)

For the minor diameter tolerance of the bolt thread, $T_{d_3}$, there are three tolerance grades, 7, 8, and 9, in accordance with table 5.

TABLE 5 – **Minor diameter tolerance of bolt thread ($T_{d_3}$)**

| Basic major diameter $d$ | | Pitch $P$ | Tolerance position c of the pitch diameter tolerance | | | Tolerance position e of the pitch diameter tolerance | | |
|---|---|---|---|---|---|---|---|---|
| | | | tolerance grade | | | tolerance grade | | |
| over | up to | | 7 | 8 | 9 | 7 | 8 | 9 |
| mm | mm | mm | µm | µm | µm | µm | µm | µm |
| 5,6 | 11,2 | 1,5 | 352 | 405 | 471 | 279 | 332 | 398 |
| | | 2 | 388 | 445 | 525 | 309 | 366 | 446 |
| | | 3 | 435 | 501 | 589 | 350 | 416 | 504 |
| 11,2 | 22,4 | 2 | 400 | 462 | 544 | 321 | 383 | 465 |
| | | 3 | 450 | 520 | 614 | 365 | 435 | 529 |
| | | 4 | 521 | 609 | 690 | 426 | 514 | 595 |
| | | 5 | 562 | 656 | 775 | 456 | 550 | 669 |
| | | 8 | 709 | 828 | 965 | 576 | 695 | 832 |
| 22,4 | 45 | 3 | 482 | 564 | 670 | 397 | 479 | 585 |
| | | 5 | 587 | 681 | 806 | 481 | 575 | 700 |
| | | 6 | 655 | 767 | 899 | 537 | 649 | 781 |
| | | 7 | 694 | 813 | 950 | 569 | 688 | 825 |
| | | 8 | 734 | 859 | 1 015 | 601 | 726 | 882 |
| | | 10 | 800 | 925 | 1 087 | 650 | 775 | 937 |
| | | 12 | 866 | 998 | 1 223 | 691 | 823 | 1 048 |
| 45 | 90 | 3 | 501 | 589 | 701 | 416 | 504 | 616 |
| | | 4 | 565 | 659 | 784 | 470 | 564 | 689 |
| | | 8 | 765 | 890 | 1 052 | 632 | 757 | 919 |
| | | 9 | 811 | 943 | 1 118 | 671 | 803 | 978 |
| | | 10 | 831 | 963 | 1 138 | 681 | 813 | 988 |
| | | 12 | 929 | 1 085 | 1 273 | 754 | 910 | 1 098 |
| | | 14 | 970 | 1 142 | 1 355 | 805 | 967 | 1 180 |
| | | 16 | 1 038 | 1 213 | 1 438 | 853 | 1 028 | 1 253 |
| | | 18 | 1 100 | 1 288 | 1 525 | 900 | 1 088 | 1 320 |
| 90 | 180 | 4 | 584 | 690 | 815 | 489 | 595 | 720 |
| | | 6 | 705 | 830 | 986 | 587 | 712 | 868 |
| | | 8 | 796 | 928 | 1 103 | 663 | 795 | 970 |
| | | 12 | 960 | 1 122 | 1 335 | 785 | 947 | 1 160 |
| | | 14 | 1 018 | 1 193 | 1 418 | 843 | 1 018 | 1 243 |
| | | 16 | 1 075 | 1 263 | 1 500 | 890 | 1 078 | 1 315 |
| | | 18 | 1 150 | 1 338 | 1 588 | 950 | 1 138 | 1 388 |
| | | 20 | 1 175 | 1 363 | 1 613 | 962 | 1 150 | 1 400 |
| | | 22 | 1 232 | 1 450 | 1 700 | 1 011 | 1 224 | 1 474 |
| | | 24 | 1 313 | 1 538 | 1 800 | 1 074 | 1 299 | 1 561 |
| | | 28 | 1 388 | 1 625 | 1 900 | 1 138 | 1 375 | 1 650 |
| 180 | 355 | 8 | 828 | 965 | 1 153 | 695 | 832 | 1 020 |
| | | 12 | 998 | 1 173 | 1 398 | 823 | 998 | 1 223 |
| | | 18 | 1 187 | 1 400 | 1 650 | 987 | 1 200 | 1 450 |
| | | 20 | 1 263 | 1 488 | 1 750 | 1 050 | 1 275 | 1 537 |
| | | 22 | 1 288 | 1 513 | 1 775 | 1 062 | 1 287 | 1 549 |
| | | 24 | 1 363 | 1 600 | 1 875 | 1 124 | 1 361 | 1 636 |
| | | 32 | 1 530 | 1 780 | 2 092 | 1 265 | 1 515 | 1 827 |
| | | 36 | 1 623 | 1 885 | 2 210 | 1 343 | 1 605 | 1 930 |
| | | 40 | 1 663 | 1 925 | 2 250 | 1 363 | 1 625 | 1 950 |
| | | 44 | 1 755 | 2 030 | 2 380 | 1 440 | 1 715 | 2 065 |

## 10 PITCH DIAMETER TOLERANCES

For the pitch diameter tolerances there are three tolerance grades, 7, 8, and 9, for nut threads, in accordance with table 6, and four tolerance grades, 6, 7, 8 and 9, for bolt threads, in accordance with table 7.

TABLE 6 – **Pitch diameter tolerance of nut thread ($T_{D_2}$)**

| **Basic major diameter** *d* | | **Pitch** *P* | **Tolerance grade** | | |
|---|---|---|---|---|---|
| over | up to and incl. | | 7 | 8 | 9 |
| mm | mm | mm | µm | µm | µm |
| 5,6 | 11,2 | 1,5 | 224 | 280 | 355 |
| | | 2 | 250 | 315 | 400 |
| | | 3 | 280 | 355 | 450 |
| 11,2 | 22,4 | 2 | 265 | 335 | 425 |
| | | 3 | 300 | 375 | 475 |
| | | 4 | 355 | 450 | 560 |
| | | 5 | 375 | 475 | 600 |
| | | 8 | 475 | 600 | 750 |
| 22,4 | 45 | 3 | 335 | 425 | 530 |
| | | 5 | 400 | 500 | 630 |
| | | 6 | 450 | 560 | 710 |
| | | 7 | 475 | 600 | 750 |
| | | 8 | 500 | 630 | 800 |
| | | 10 | 530 | 670 | 850 |
| | | 12 | 560 | 710 | 900 |
| 45 | 90 | 3 | 355 | 450 | 560 |
| | | 4 | 400 | 500 | 630 |
| | | 8 | 530 | 670 | 850 |
| | | 9 | 560 | 710 | 900 |
| | | 10 | 560 | 710 | 900 |
| | | 12 | 630 | 800 | 1 000 |
| | | 14 | 670 | 850 | 1 060 |
| | | 16 | 710 | 900 | 1 120 |
| | | 18 | 750 | 950 | 1 180 |
| 90 | 180 | 4 | 425 | 530 | 670 |
| | | 6 | 500 | 630 | 800 |
| | | 8 | 560 | 710 | 900 |
| | | 12 | 670 | 850 | 1 060 |
| | | 14 | 710 | 900 | 1 120 |
| | | 16 | 750 | 950 | 1 180 |
| | | 18 | 800 | 1 000 | 1 250 |
| | | 20 | 800 | 1 000 | 1 250 |
| | | 22 | 850 | 1 060 | 1 320 |
| | | 24 | 900 | 1 120 | 1 400 |
| | | 28 | 950 | 1 180 | 1 500 |
| 180 | 355 | 8 | 600 | 750 | 950 |
| | | 12 | 710 | 900 | 1 120 |
| | | 18 | 850 | 1 060 | 1 320 |
| | | 20 | 900 | 1 120 | 1 400 |
| | | 22 | 900 | 1 120 | 1 400 |
| | | 24 | 950 | 1 180 | 1 500 |
| | | 32 | 1 060 | 1 320 | 1 700 |
| | | 36 | 1 120 | 1 400 | 1 800 |
| | | 40 | 1 120 | 1 400 | 1 800 |
| | | 44 | 1 250 | 1 500 | 1 900 |