SLOVENSKI STANDARD
SIST ISO 3019-1:1998

01-december-1998

Fluidna tehnika - Hidravlika - Ļrpalke in motorji z iztiskavanjem - Mere in identifikacijska koda za prigradne prirobnice in gredi - 1. del: Colske vrste v metrskih enotah

Hydraulic fluid power -- Positive displacement pumps and motors -- Dimensions and identification code for mounting flanges and shaft ends -- Part 1: Inch series shown in metric units

Transmissions hydrauliques -- Pompes volumétriques et moteurs -- Dimensions et code d'identification des flasques de montage et des bouts d'arbres -- Partie 1: Conversion en unités métriques de la série en inches

Ta slovenski standard je istoveten z: ISO 3019-1:1975

ICS:

23.100.10 Hidravliļ ne ļ rpalke in motorji Pumps and motors

SIST ISO 3019-1:1998 en

INTERNATIONAL STANDARD ISO 3019/I

INTERNATIONAL ORGANIZATION FOR STANDARDIZATION •МЕЖДУНАРОДНАЯ ОРГАНИЗАЦИЯ ПО СТАНДАРТИЗАЦИИ•ORGANISATION INTERNATIONALE DE NORMALISATION

Hydraulic fluid power — Positive displacement pumps and motors — Dimensions and identification code for mounting flanges and shaft ends — Part I : Inch series shown in metric units

Transmissions hydrauliques — Pompes volumétriques et moteurs — Dimensions et code d'identification des flasques de montage et des bouts d'arbres — Partie I : Conversion en unités métriques de la série en inches

First edition — 1975-02-01

UDC 621.8.032 : 621.65

Ref. No. ISO 3019/I-1975 (E)

Descriptors : fluid power, hydraulic equipment, positive displacement pumps, hydraulic motors, shafts (machine elements), dimensions, designation, coding, mounting flanges.

Price based on 8 pages

FOREWORD

ISO (the International Organization for Standardization) is a worldwide federation of national standards institutes (ISO Member Bodies). The work of developing International Standards is carried out through ISO Technical Committees. Every Member Body interested in a subject for which a Technical Committee has been set up has the right to be represented on that Committee. International organizations, governmental and non-governmental, in liaison with ISO, also take part in the work.

Draft International Standards adopted by the Technical Committees are circulated to the Member Bodies for approval before their acceptance as International Standards by the ISO Council.

International Standard ISO 3019/I was drawn up by Technical Committee ISO/TC 131, *Fluid power systems and components,* and circulated to the Member Bodies in December 1972.

It has been approved by the Member Bodies of the following countries :

Australia	India	South Africa, Rep. of
Austria	Ireland	Sweden
Belgium	Japan	Switzerland
Brazil	Mexico	Thailand
Bulgaria	Netherlands	Turkey
Egypt, Arab Rep. of	New Zealand	United Kingdom
France	Portugal	U.S.A.
Germany	Romania	

The Member Bodies of the following countries expressed disapproval of the document on technical grounds :

Czechoslovakia
Italy
Poland

ISO 3019 will ultimately consist of two parts : part I is based upon the inch series of mountings for hydraulic fluid power pumps and motors, with the dimensions shown in metric units; part II, based upon a preferred metric series of mounting flanges, is expected to be available by the end of 1974 and will thereafter be the preferred part.

Printed in Switzerland

Hydraulic fluid power — Positive displacement pumps and motors — Dimensions and identification code for mounting flanges and shaft ends — Part I : Inch series shown in metric units

0 INTRODUCTION

In hydraulic fluid power systems, power is transmitted and controlled through a liquid under pressure within an enclosed circuit. Pumps are components which convert rotary mechanical power into fluid power. Motors are components which convert fluid power into rotary mechanical power.

1 SCOPE AND FIELD OF APPLICATION

1.1 This International Standard specifies sizes, dimensions and an identification code for positive displacement hydraulic fluid power pump and motor mounting flanges of the following types :

- two-bolt flanges;
- four-bolt flanges.

1.2 It also specifies sizes, dimensions and an identification code for positive displacement hydraulic fluid power pump and motor shaft ends of the following types :

- straight shafts without thread;
- straight shafts with thread;
- tapered shafts with thread;
- 30° involute spline.

1.3 It provides :

- a minimum number of flange and shaft sizes;
- composite dimension reference and identification codes for pumps and motors;
- simplified dimensional interchangeability with regard to flanges and shafts;
- preferred sizes and dimensions for new designs.

2 REFERENCES

ISO/R 725, *ISO inch screw threads — Basic dimensions.*

ISO 5598, *Fluid power systems and components — Vocabulary.*

3 DEFINITIONS

For definitions of terms used, see ISO 5598.

4 DIMENSIONS

4.1 Dimensions shown without tolerance are nominal.

4.2 Select flange and shaft dimensions for pumps and motors manufactured in accordance with this International Standard from tables 2 to 7 inclusive.

5 IDENTIFICATION CODE

5.1 Use mounting flange identification codes shown in tables 2 and 3.

5.1.1 The number preceding the dash (–) is an approximation, in millimetres, to the mounting flange pilot diameter.

5.1.2 The number following the dash (–) states the number of mounting bolt holes in the flange.

5.2 Use shaft end identification codes shown in tables 4 to 7.

5.2.1 The number preceding the dash (–) is an approximation, in millimetres, to the shaft major diameter.

5.2.2 The number following the dash (–) is arbitrarily assigned as follows :

straight shafts without thread :	– 1
straight shafts with thread :	– 2
tapered shafts with thread :	– 3
30° involute spline :	– 4

6 FLANGE/SHAFT END COMBINATIONS

Use preferred flange/shaft end combinations shown in table 1. Use other combinations only when absolutely necessary, and by agreement between the interested parties.

7 FLANGE/SHAFT CONCENTRICITY

Maintain flange/shaft concentricity within 0,25 mm in accordance with tables 4 to 7. (Rigid couplings may require closer tolerance.)

TABLE 1 — **Flange/shaft end combinations**

Flange series	Shaft end series
50 —	13 —
82 —	16 —
101 —	22 —
101 —	25 —
127 —	32 —
127 —	38 —
152 —	44 —
165 —	44 —
177 —	50 —

Dimensions in millimetres

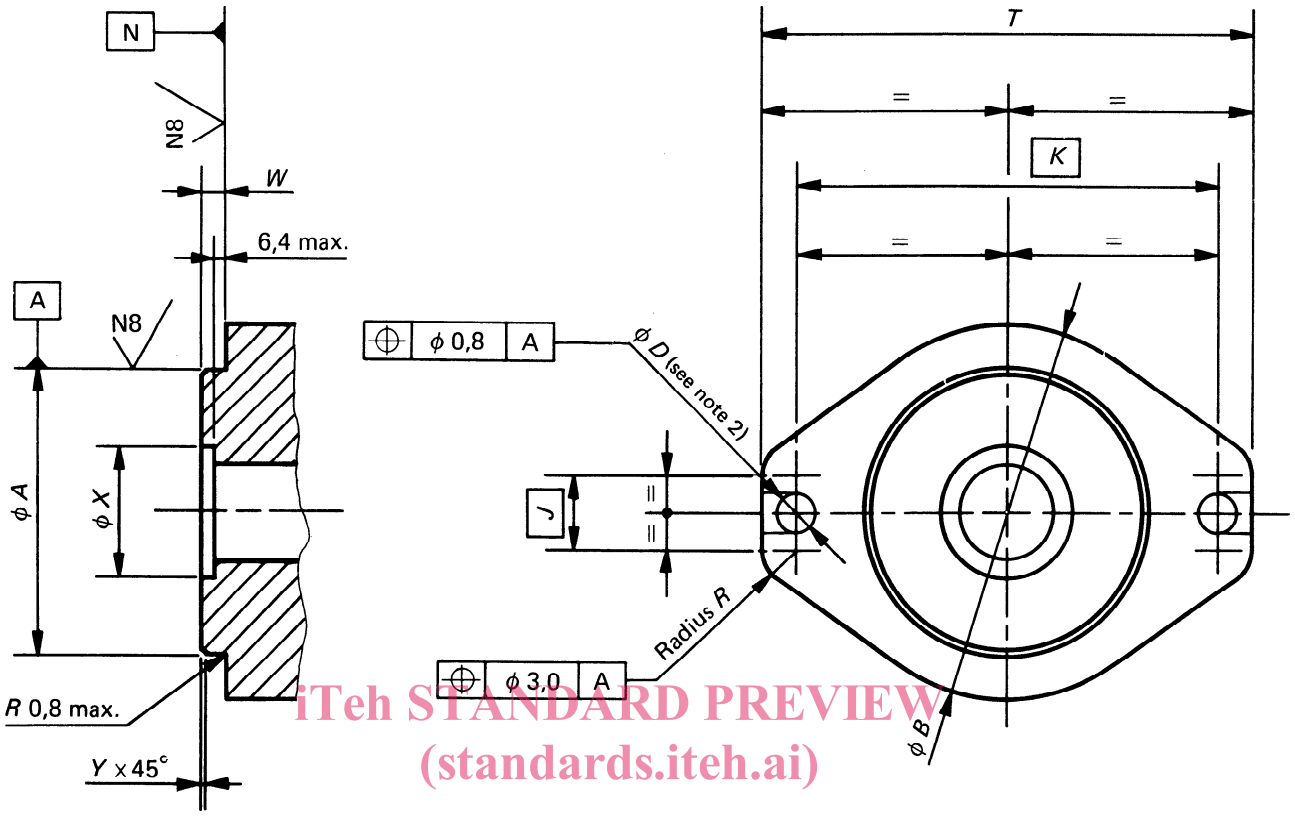

TABLE 2 — **Two-bolt mounting flange**

Dimensions in millimetres

Identification code	Pilot dimensions				Flange dimensions					
	A 0 −0,05	*W* 0 −0,5	*X* min.	*Y* max.	*B*	*J*	*K*	*D* +0,3 −0,1	*T*	*R*
50 – 2	50,80	6,4	–	0,8	64	14	82	10,3	102	10
82 – 2	82,55	6,4	–	0,8	95	18	106	11,1	130	12
101 – 2	101,60	9,7	51	1,5	120	25	146	14,3	174	14
127 – 2	127,00	12,7	64	1,5	148	31	181	17,5	213	16
152 – 2	152,40	12,7	70	1,5	200	40	229	20,6	267	19
165 – 2	165,10	15,9	70	2,3	270	55	318	27,0	368	25
177 – 2	177,80	15,9	70	2,3	300	60	350	27,0	400	25

NOTES

1 Tolerances : 1-place dimensions ± 0,5.

2 Slots instead of holes : optional.

Dimensions in millimetres

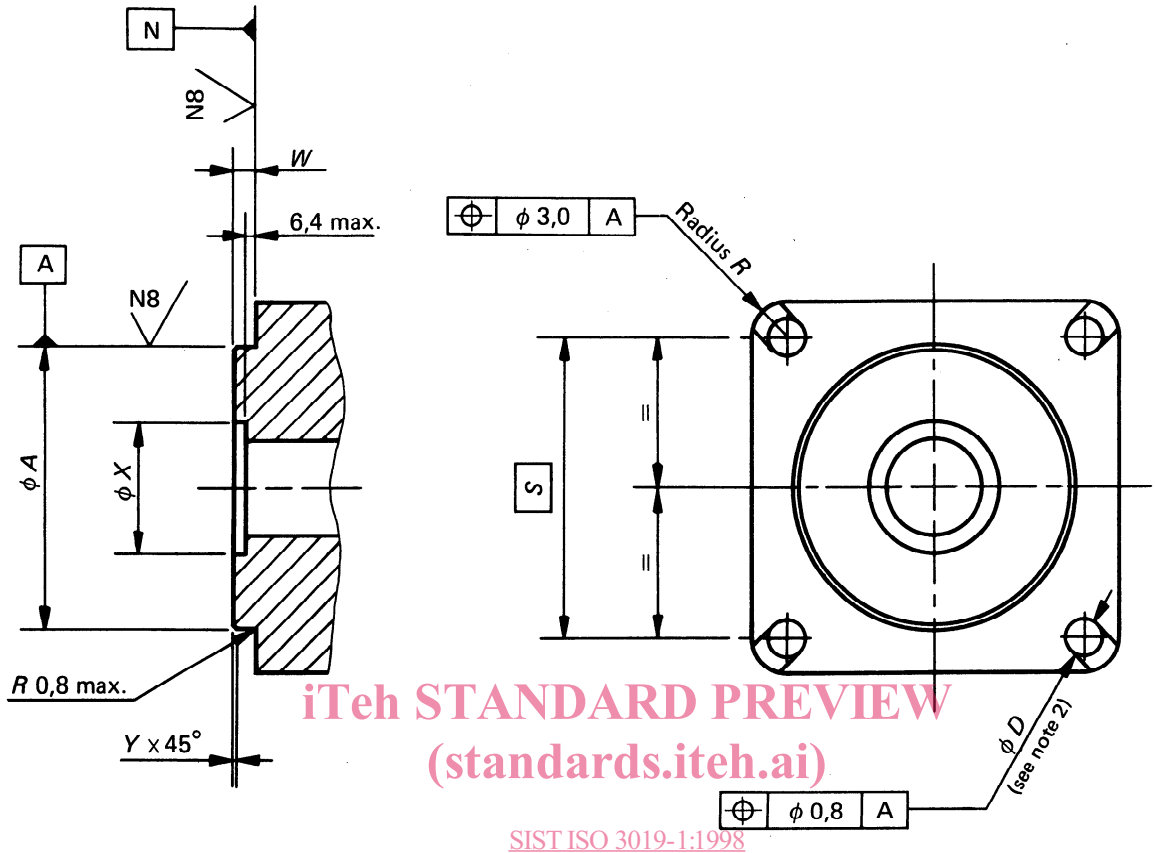

TABLE 3 — **Four-bolt mounting flange**

Dimensions in millimetres

Identification code	Pilot dimensions				Flange dimensions		
	A 0 − 0,05	*W* 0 − 0,51	*X* min.	*Y* max.	*R*	*D* + 0,3 − 0,1	*S*
101 – 4	101,60	9,7	51	1,5	14	14,3	89,8
127 – 4	127,00	12,7	64	1,5	14	14,3	114,5
152 – 4	152,40	12,7	70	1,5	19	20,6	161,6
165 – 4	165,10	15,9	70	2,3	19	20,6	224,5
177 – 4	177,80	15,9	70	2,3	25	27,0	247,5

NOTES

1 Tolerances : 1-place dimensions ± 0,5.

2 Slots instead of holes : optional.

Dimensions in millimetres

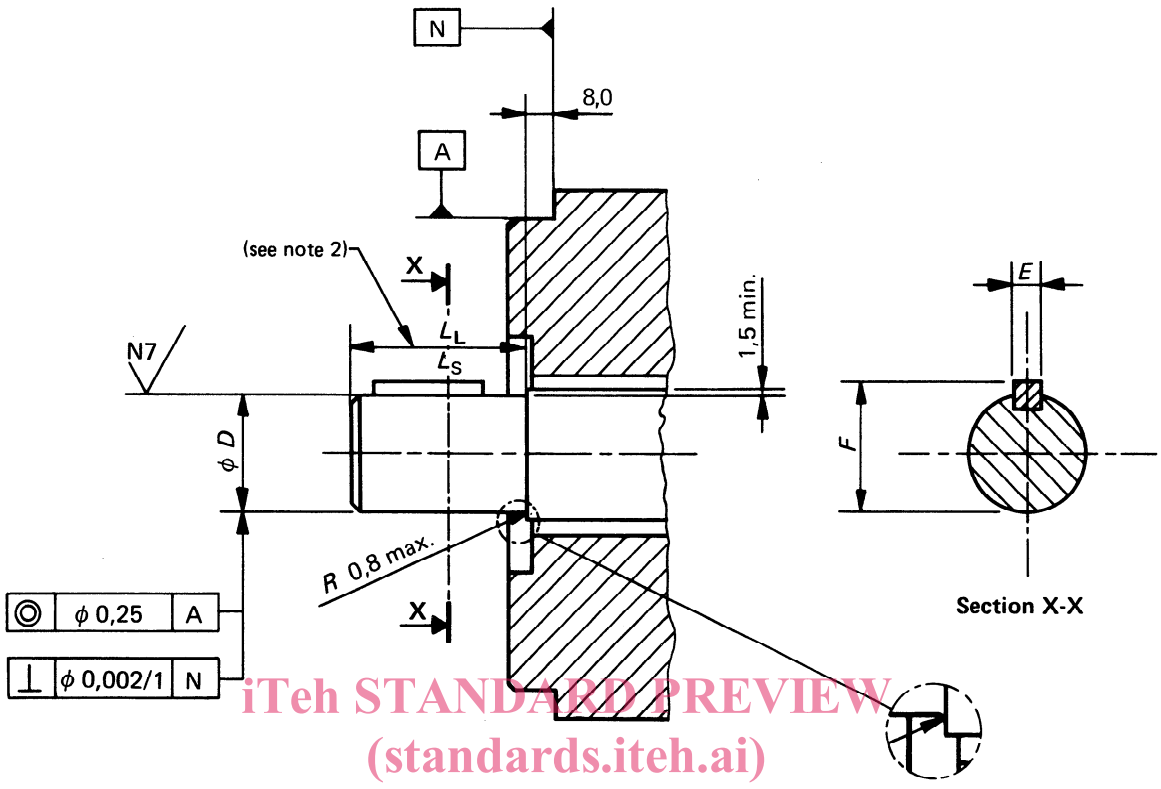

TABLE 4 — **Straight shaft ends without thread**

Dimensions in millimetres

Identification code	D max.	D min.	E (Key width) $^{+0,03}_{0}$	F ± 0,13	L_L	L_S
13 – 1	12,70	12,67	3,18	14,07	–	19
16 – 1	15,88	15,85	3,97	17,60	51	24
22 – 1	22,23	22,20	6,35	24,90	63	33
25 – 1	25,40	25,35	6,35	28,10	70	38
32 – 1	31,75	31,70	7,94	35,20	76	48
38 – 1	38,10	38,05	9,53	42,27	83	54
44 – 1	44,45	44,40	11,11	49,30	92	67

NOTES

1 Tolerances : 1-place dimensions ± 0,5.

2 L_L is an optional long length shaft.