# SLOVENSKI STANDARD
# SIST EN 301 790 V1.2.2:2003

**01-december-2003**

---

**Digitalna videoradiodifuzija (DVB) – Povratni kanal za satelitske distribucijske sisteme**

Digital Video Broadcasting (DVB); Interaction channel for satellite distribution systems



**Ta slovenski standard je istoveten z: EN 301 790 Version 1.2.2**



---

**ICS:**

| | | |
|---|---|---|
| 33.070.40 | Satelit | Satellite |
| 33.170 | Televizijska in radijska difuzija | Television and radio broadcasting |

**SIST EN 301 790 V1.2.2:2003** **en**

# ETSI EN 301 790 V1.2.2 (2000-12)

*European Standard (Telecommunications series)*

## Digital Video Broadcasting (DVB); Interaction channel for satellite distribution systems;

European Broadcasting Union Union Européenne de Radio-Télévision

EBU·UER

Reference
DEN/JTC-DVB-96

Keywords
broadcasting, DVB, interaction, satellite

***ETSI***

650 Route des Lucioles
F-06921 Sophia Antipolis Cedex - FRANCE

Tel.: +33 4 92 94 42 00 Fax: +33 4 93 65 47 16

Siret N° 348 623 562 00017 - NAF 742 C
Association à but non lucratif enregistrée à la
Sous-Préfecture de Grasse (06) N° 7803/88



***Important notice***

Individual copies of the present document can be downloaded from:
http://www.etsi.org

The present document may be made available in more than one electronic version or in print. In any case of existing or perceived difference in contents between such versions, the reference version is the Portable Document Format (PDF). In case of dispute, the reference shall be the printing on ETSI printers of the PDF version kept on a specific network drive within ETSI Secretariat.

Users of the present document should be aware that the document may be subject to revision or change of status. Information on the current status of this and other ETSI documents is available at http://www.etsi.org/tb/status/

If you find errors in the present document, send your comment to:
editor@etsi.fr

***Copyright Notification***

# Contents

# Intellectual Property Rights

IPRs essential or potentially essential to the present document may have been declared to ETSI. The information pertaining to these essential IPRs, if any, is publicly available for **ETSI members and non-members**, and can be found in ETSI SR 000 314: *"Intellectual Property Rights (IPRs); Essential, or potentially Essential, IPRs notified to ETSI in respect of ETSI standards"*, which is available from the ETSI Secretariat. Latest updates are available on the ETSI Web server (http://www.etsi.org/ipr).

Pursuant to the ETSI IPR Policy, no investigation, including IPR searches, has been carried out by ETSI. No guarantee can be given as to the existence of other IPRs not referenced in ETSI SR 000 314 (or the updates on the ETSI Web server) which are, or may be, or may become, essential to the present document.

# Foreword

This European Standard (Telecommunications series) has been produced by Joint Technical Committee (JTC) of the European Broadcasting Union (EBU), Comité Européen de Normalisation Electrotechnique (CENELEC) and the European Telecommunications Standards Institute (ETSI).

NOTE: The EBU/ETSI JTC Broadcast was established in 1990 to co-ordinate the drafting of standards in the specific field of broadcasting and related fields. Since 1995 the JTC Broadcast became a tripartite body by including in the Memorandum of Understanding also CENELEC, which is responsible for the standardization of radio and television receivers. The EBU is a professional association of broadcasting organizations whose work includes the co-ordination of its members' activities in the technical, legal, programme-making and programme-exchange domains. The EBU has active members in about 60 countries in the European broadcasting area; its headquarters is in Geneva.



European Broadcasting Union
CH-1218 GRAND SACONNEX (Geneva)
Switzerland
Tel: +41 22 717 21 11
Fax: +41 22 717 24 81



Founded in September 1993, the DVB Project is a market-led consortium of public and private sector organizations in the television industry. Its aim is to establish the framework for the introduction of MPEG-2 based digital television services. Now comprising over 200 organizations from more than 25 countries around the world, DVB fosters market-led systems, which meet the real needs, and economic circumstances, of the consumer electronics and the broadcast industry.

| National transposition dates | |
|---|---|
| Date of adoption of this EN: | 24 November 2000 |
| Date of latest announcement of this EN (doa): | 28 February 2001 |
| Date of latest publication of new National Standard or endorsement of this EN (dop/e): | 31 August 2001 |
| Date of withdrawal of any conflicting National Standard (dow): | 31 August 2001 |

# 1 Scope

The present document is the baseline specification for the provision of the interaction channel for GEO satellite interactive networks with fixed return channel satellite terminals (RCST). The present document facilitates the use of RCSTs for individual or collective installation (e.g. SMATV) in a domestic environment. It also supports the connection of such terminals with in-house data networks. The present document may be applied to all frequency bands allocated to GEO satellite services.

The solutions provided in the present document for interaction channel for satellite interactive networks are a part of a wider set of alternatives to implement interactive services for Digital Video Broadcasting (DVB) systems.

# 2 References

The following documents contain provisions which, through reference in this text, constitute provisions of the present document.

- References are either specific (identified by date of publication, edition number, version number, etc.) or non-specific.
- For a specific reference, subsequent revisions do not apply.
- For a non-specific reference, the latest version applies.
- A non-specific reference to an ETS shall also be taken to refer to later versions published as an EN with the same number.



[1] ETSI EN 300 421: "Digital Video Broadcasting (DVB); Framing structure, channel coding and modulation for 11/12 GHz satellite services".

[2] ETSI TR 101 202: "Digital Video Broadcasting (DVB); Implementation guidelines for Data Broadcasting".

[3] ETSI ETS 300 802: "Digital Video Broadcasting (DVB); Network-independent protocols for DVB interactive services".

[4] ETSI EN 300 468: "Digital Video Broadcasting (DVB); Specification for Service Information (SI) in DVB systems".

[5] ETSI EN 301 192: "Digital Video Broadcasting (DVB); DVB specification for data broadcasting".

[6] ETSI EN 301 459: "Satellite Earth Stations and Systems (SES); Harmonized EN for Satellite Interactive Terminals (SIT) and Satellite User Terminals (SUT) transmitting towards satellites in geostationary orbit in the 29,5 GHz to 30 GHz frequency bands covering essential requirements under article 3.2 of the R&TTE Directive".

[7] IETF RFC 1483 (1993): "Multiprotocol Encapsulation over ATM Adaptation Layer 5".

[8] ETSI TR 100 815: "Digital Video Broadcasting (DVB); Guidelines for the handling of Asynchronous Transfer Mode (ATM) signals in DVB systems".

[9] ISO/IEC 13818-1 (1996): "Information technology - Generic coding of moving pictures and associated audio information; Part 1: Systems".

[10] ETSI ETR 154: "Digital Video Broadcasting (DVB); Implementation guidelines for the use of MPEG-2 Systems, Video and Audio in satellite, cable and terrestrial broadcasting applications".

[11] ITU-T Recommendation Q.2931 (1995): "Broadband Integrated Services Digital Network (B-ISDN) - Digital Subscriber Signalling System No. 2 (DSS 2) - User-Network Interface (UNI) - Layer 3 specification for basic call/connection control".

[12] IEEE 802.3 (1996): "Information technology - Telecommunications and information exchange between systems - Local and metropolitan area networks - Specific requirements - Part 3: Carrier sense multiple access with collision detection (CSMA/CD) access method and physical layer specifications".

[13] ITU-T Recommendation I.432 (1999): "B-ISDN user-network interface - Physical layer specification".

[14] ETSI ES 200 800: "Digital Video Broadcasting (DVB); DVB interaction channel for Cable TV distribution System (CATV); DVB document A023 Rev. 1, June 1999.

[15] IETF RFC 2104 (1997): "HMAC: Keyed-Hashing for Message Authentication".

[16] ANSI/IEEE 754 (1985): "IEEE Standard for Binary Floating-Point Arithmetic".

[17] ISO/IEC 13818-6 (1998): "Information technology - Generic coding of moving pictures and associated audio information - Part 6: Extensions for DSM-CC".

[18] ITU-T Recommendation I.363-5 (1996): "B-ISDN ATM Adaptation Layer specification: Type 5 AAL".

# 3 Definitions, symbols and abbreviations

## 3.1 Definitions

For the purposes of the present document, the following term and definition applies:



**reserved:** term "reserved", when used in the clauses defining the coded bit stream, indicates that the value may be used for future extensions. Unless otherwise specified within the present document, all reserved bits shall be set to '1'.



## 3.2 Symbols

For the purposes of the present document, the following symbols apply:

| | |
|---|---|
| * | multiplication |
| ^ | power |
| ~ | concatenation |
| mod | modulo division |
| (unsigned char)x | ANSI C cast operator: converts value x to unsigned char |
| "" | empty string (zero length) |
| nonce1 | random string (NCC) |
| nonce2 | random string (RCST) |
| $N_{atm}$ | Number of ATM cells in an ATM TRF burst (1, 2 or 4). |
| $N_{mpeg}$ | Number of MPEG packets in an optional MPEG2-TS TRF burst (1 and 2*n for n=1 to 12). |
| $N_{p,atm}$ | Number of bytes of the prefix used on ATM TRF bursts (0, 2 or 4). |
| $N_{p,sync}$ | Number of bytes of the optional prefix used on SYNC bursts: 0, 2…31 for concatenated code, 0, 12 or 16 for the Turbo code (see subclause 6.4). |

## 3.3 Abbreviations

For the purposes of the present document, the following abbreviations apply:

| | |
|---|---|
| AAL | ATM Adaptation Layer |
| ACQ | Acquisition burst |
| ATM | Asynchronous Transfer Mode |
| AVBDC | Absolute Volume-Based Dynamic Capacity |
| BCD | Binary Coded Decimal |
| BTP | Burst Time Plan |
| CBC | Cipher Block Chaining |

| | |
|---|---|
| CMF | Control & Monitoring Functions |
| CMT | Correction Message Table |
| CR | Capacity Requests |
| CRA | Constant-Rate Assignment |
| CRC | Cyclic Redundancy Check |
| CRSC | Circular Recursive Systematic Convolutional |
| CSC | Common Signalling Channel |
| CTRL/MNGM | Control/Management virtual channel used in DULM |
| DES | Data Encryption Standard |
| DSM-CC | Digital Storage Medium - Command and Control |
| DULM | Data Unit Labelling Method |
| DVB | Digital Video Broadcast |
| DVB-S | Digital Video Broadcast by Satellite |
| EKE | Explicit Key Exchange |
| EN | European Norm |
| ETS | European Telecommunications Standard |
| ETSI | European Telecommunications Standards Institute |
| FCA | Free Capacity Assignment |
| FCT | Frame Composition Table |
| FLS | Forward Link Signalling |
| GEO | Geostationary Earth Orbit |
| GFC | Generic Flow Control |
| HMAC | Hash-based Message Authentication Code |
| HPA | High Power Amplifier |
| I | In-phase |
| ID | Identifier |
| IDU | Indoor unit |
| IE | Information Element |
| IEC | International Electrotechnical Commission |
| IEEE | Institute of Electrical and Electronics Engineers |
| IF | Intermediate Frequency |
| IP | Internet Protocol |
| ISDN | Integrated Services Digital Network |
| ISO | International Standards Organization |
| ITU | International Telecommunication Union |
| IV | Initialization Vector |
| LFSR | Linear Feedback Shift Register |
| LLC | Logical Link Control |
| LSB | Least Significant Bit |
| M&C | Monitoring and Control |
| MAC | Medium Access Control |
| MF-TDMA | Multiple-Frequency Time-Division Multiple Access |
| MIB | Management Information Base |
| MKE | Main Key Exchange |
| MPEG | Moving Picture Experts Group |
| MSB | Most Significant bit |
| NCC | Network Control Centre |
| NCR | Network Clock Reference |
| NIT | Network Information Table |
| NIU | Network Interface Unit |
| OBO | Output Back-Off |
| ODU | Outdoor unit |
| OSI | Open Systems Interconnection |
| PAT | Program Association Table |
| PC | Personal Computer |
| PCR | Program Clock Reference |
| PID | Packet IDentifier |
| PMT | Program Map Table |
| ppm | parts per million |
| PRBS | Pseudo Random Binary Sequence |
| PRNG | Pseudo-Random Number Generator |
| PSI | Program Specific Information |

| | |
|---|---|
| PSTN | Public Switched Telephone Network |
| PVC | Permanent Virtual Circuit |
| Q | Quadrature |
| QKE | Quick Key Exchange |
| QPSK | Quadrature Phase-Shift Keying |
| RBDC | Rate-Based Dynamic Capacity |
| RCST | Return Channel Satellite Terminal |
| RF | Radio Frequency |
| RMT | RCS Map Table |
| RS | Reed-Solomon |
| SAC | Satellite Access Control |
| SAR | Segmentation And Re-assembly |
| SCT | Superframe Composition Table |
| SDT | Service Description Table |
| SI | Service Information |
| SIT | Satellite Interactive Terminal |
| SMATV | Satellite Master Antenna Television |
| SNAP | Sub Network Access Protocol |
| SNMP | Simple Network Management Protocol |
| SPT | Satellite Position Table |
| SUT | Satellite User Terminal |
| SVC | Switched Virtual Circuit |
| SYNC | Synchronization burst type |
| TBTP | Terminal Burst Time Plan |
| TCT | Time-slot Composition Table |
| TDMA | Time-Division Multiple Access |
| TG | Traffic Gateway |
| TIM | Terminal Information Message |
| TRF | Traffic (burst type) |
| TS | Transport Stream |
| Tx | Transmitter |
| UNI | User Network Interface |
| VBDC | Volume-Based Dynamic Capacity |
| VCI | Virtual Circuit Identifier |
| VPI | Virtual Path Identifier |



# 4 Reference Models for Satellite Interactive Networks in DVB

## 4.1 Protocol Stack Model

For interactive services supporting broadcast to the end user with return channel, a simple communications model consists of the following layers:

**physical layer:** where all the physical (electrical) transmission parameters are defined.

**transport layer:** defines all the relevant data structures and communication protocols like data containers, etc.

**application layer:** is the interactive application software and runtime environment (e.g. home shopping application, script interpreter, etc.).

A simplified model of the OSI layers was adopted to facilitate the production of specifications for these layers. Figure 1 points out the lower layers of the simplified model and identifies some of the key parameters for the lower two layers.

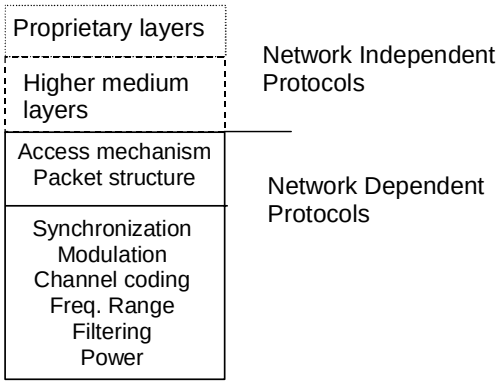


**Figure 1: Layer structure for generic system reference model**

The present document addresses the satellite interactive network dependent aspects only.

## 4.2 System Model

Figure 2 shows the system model which is to be used within DVB for interactive services.

In the system model, two channels are established between the service provider and the user:

- **Broadcast Channel:** a unidirectional broadband Broadcast Channel including video, audio and data is established from the service provider to the users. It may include the Forward Interaction Path.
- **Interaction Channel:** a bi-directional Interaction Channel is established between the service provider and the user for interaction purposes. It is formed by:
  - **Return Interaction Path** (Return Channel)**:** from the user to the service provider. It is used to make requests to the service provider, to answer questions or to transfer data.
  - **Forward Interaction Path:** from the service provider to the user. It is used to provide information from the service provider to the user and any other required communication for the interactive service provision. It may be embedded into the Broadcast Channel. It is possible that this channel is not required in some simple implementations which make use of the Broadcast Channel for the carriage of data to the user.



The RCST is formed by the Network Interface Unit (consisting of the Broadcast Interface Module and the Interactive Interface Module) and the Set Top Unit. The RCST provides interface for both Broadcast and Interaction Channels. The interface between the RCST and the interaction network is via the Interactive Interface Module.

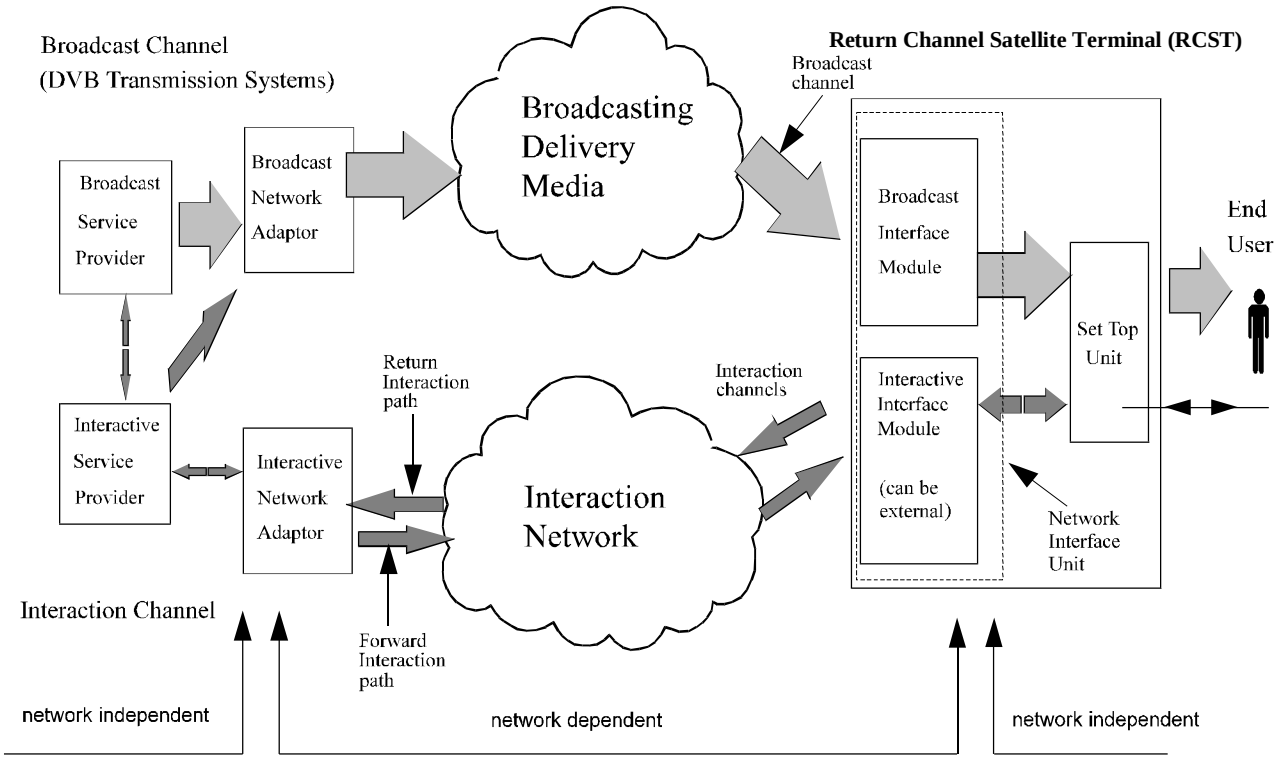


**Figure 2: A generic system Reference Model for Interactive Systems**



## 4.3 Reference Model of the Satellite Interactive Network

An overall Satellite Interactive Network, within which a large number of Return Channel Satellite Terminal (RCST) will operate, will comprise the following functional blocks, as shown in figure 3:



- **Network Control Centre:** a NCC provides monitoring & control functions. It generates control and timing signals for the operation of the Satellite Interactive Network to be transmitted by one or several Feeder Stations.

- **Traffic Gateway:** a TG receives the RCST return signals, provides accounting functions, interactive services and/or connections to external public, proprietary and private service providers (data bases, pay-per-view TV or video sources, software download, tele-shopping, tele-banking, financial services, stock market access, interactive games etc.) and networks (Internet, ISDN, PSTN etc…).

- **Feeder:** a Feeder transmits the forward link signal, which is a standard satellite digital video broadcast (DVB-S) uplink, onto which are multiplexed the user data and/or the control and timing signals needed for the operation of the Satellite Interactive Network.

An RCST is e.g. a SIT or a SUT as described in [6].