SLOVENSKI STANDARD
SIST EN 61754-8:1999

01-maj-1999

Fibre optic connector interfaces - Part 8: Type CF08 connector family (IEC 61754-8:1996)

Fibre optic connector interfaces -- Part 8: Type CF08 connector family

Steckgesichter von Lichtwellenleiter-Steckverbindern -- Teil 8: Bauart CF08 Steckverbinderfamilie

Interfaces de connecteurs pour fibres optiques -- Partie 8: Familles de connecteurs de type CF08

Ta slovenski standard je istoveten z: EN 61754-8:1997

ICS:

33.180.20	Povezovalne naprave za optična vlakna	Fibre optic interconnecting devices

SIST EN 61754-8:1999 **en**

EUROPEAN STANDARD

NORME EUROPÉENNE

EUROPÄISCHE NORM

EN 61754-8

September 1997

ICS 33.180.20

English version

Fibre optic connector interfaces
Part 8: Type CF08 connector family
(IEC 61754-8:1996)

Interfaces de connecteurs pour fibres optiques
Partie 8: Familles de connecteurs de type CF08
(CEI 61754-8:1996)

Lichtwellenleiter-Steckverbinderübergänge
Teil 8: Typ CF08 Steckverbinderfamilie
(IEC 61754-8:1996)

This European Standard was approved by CENELEC on 1997-07-01. CENELEC members are bound to comply with the CEN/CENELEC Internal Regulations which stipulate the conditions for giving this European Standard the status of a national standard without any alteration.

Up-to-date lists and bibliographical references concerning such national standards may be obtained on application to the Central Secretariat or to any CENELEC member.

This European Standard exists in three official versions (English, French, German). A version in any other language made by translation under the responsibility of a CENELEC member into its own language and notified to the Central Secretariat has the same status as the official versions.

CENELEC members are the national electrotechnical committees of Austria, Belgium, Denmark, Finland, France, Germany, Greece, Iceland, Ireland, Italy, Luxembourg, Netherlands, Norway, Portugal, Spain, Sweden, Switzerland and United Kingdom.

CENELEC

European Committee for Electrotechnical Standardization
Comité Européen de Normalisation Electrotechnique
Europäisches Komitee für Elektrotechnische Normung

Central Secretariat: rue de Stassart 35, B - 1050 Brussels

Ref. No. EN 61754-8:1997 E

Foreword

The text of the International Standard IEC 61754-8:1996, prepared by SC 86B, Fibre optic interconnecting devices and passive components, of IEC TC 86, Fibre optics, was submitted to the Unique Acceptance Procedure and was approved by CENELEC as EN 61754-8 on 1997-07-01 without any modification.

The following dates were fixed:

- latest date by which the EN has to be implemented at national level by publication of an identical national standard or by endorsement (dop) 1998-06-01
- latest date by which the national standards conflicting with the EN have to be withdrawn (dow) 1998-06-01

Endorsement notice

The text of the International Standard IEC 61754-8:1996 was approved by CENELEC as a European Standard without any modification.

NORME INTERNATIONALE

INTERNATIONAL STANDARD

CEI
IEC
1754-8

Première édition
First edition
1996-10

Interfaces de connecteurs pour fibres optiques –

Partie 8: Familles de connecteurs de type CF08

Fibre optic connector interfaces –

Part 8: CF08 connector family

Bureau central de la Commission Electrotechnique Internationale 3, rue de Varembé Genève, Suisse

Commission Electrotechnique Internationale
International Electrotechnical Commission
Международная Электротехническая Комиссия

CODE PRIX
PRICE CODE H

Pour prix, voir catalogue en vigueur
For price, see current catalogue

CONTENTS

INTERNATIONAL ELECTROTECHNICAL COMMISSION

FIBRE OPTIC CONNECTOR INTERFACES –

Part 8: Type CF08 connector family

FOREWORD

1) The IEC (International Electrotechnical Commission) is a worldwide organization for standardization comprising all national electrotechnical committees (IEC National Committees). The object of the IEC is to promote international co-operation on all questions concerning standardization in the electrical and electronic fields. To this end and in addition to other activities, the IEC publishes International Standards. Their preparation is entrusted to technical committees; any IEC National Committee interested in the subject dealt with may participate in this preparatory work. International, governmental and non-governmental organizations liaising with the IEC also participate in this preparation. The IEC collaborates closely with the International Organization for Standardization (ISO) in accordance with conditions determined by agreement between the two organizations.

2) The formal decisions or agreements of the IEC on technical matters express, as nearly as possible, an international consensus of opinion on the relevant subjects since each technical committee has representation from all interested National Committees.

3) The documents produced have the form of recommendations for international use and are published in the form of standards, technical reports or guides and they are accepted by the National Committees in that sense.

4) In order to promote international unification, IEC National Committees undertake to apply IEC International Standards transparently to the maximum extent possible in their national and regional standards. Any divergence between the IEC Standard and the corresponding national or regional standard shall be clearly indicated in the latter.

5) The IEC provides no marking procedure to indicate its approval and cannot be rendered responsible for any equipment declared to be in conformity with one of its standards.

6) Attention is drawn to the possibility that some of the elements of this International Standard may be the subject of patent rights. The IEC shall not be held responsible for identifying any or all such patent rights.

International Standard IEC 1754-8 has been prepared by sub-commitee 86B: Fibre optic interconnecting devices and passive components, of IEC technical commitee 86: Fibre optics.

The text of this standard is based on the following documents:

FDIS	Report on voting
86B/770/FDIS	86B/883/RVD

Full information on the voting for the approval of this standard can be found in the report on voting indicated in the above table.

FIBRE OPTIC CONNECTOR INTERFACES –

Part 8: Type CF08 connector family

1 Scope

This part of IEC 1754 defines the standard interface dimensions for the type CF08 family of connectors.

2 Description

The parent connector for the type CF08 connector family is a single-way plug connector which is characterized by a conical ferrule butting against a 4 mm diameter sphere or equivalent. It includes a push-pull coupling mechanism and a ferrule spring loaded in the direction of the optical axis. The plug has a single male key which may be used to orient and limit the relative rotation between the connector and the component to which it is mated.

3 Interfaces

This standard contains the following standard interfaces:

a) interface 8-1: plug connector interface;

b) interface 8-2: adapter – for plug/adapter/plug configuration;

c) interface 8-3: receptacle connector – for plug/receptacle/optical component configuration.

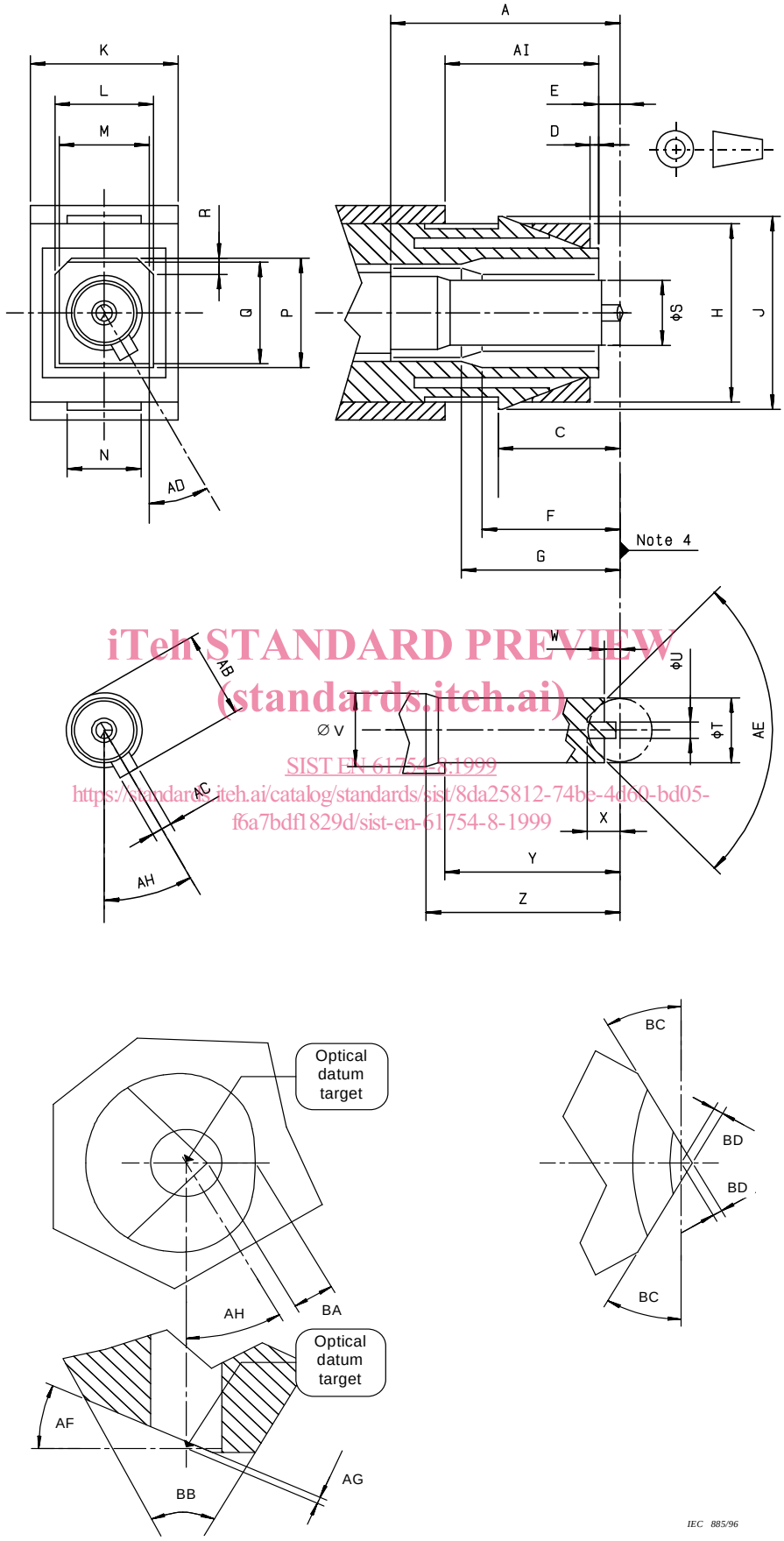

Figure 1 – Plug connector interface